frontiers in Education

TYPE Original Research
PUBLISHED 09 November 2026
DOI 10.3389/feduc.2026.1923377

Check for updates

OPEN ACCESS

EDITED BY
Angeline Dharmaraj-Savicks,
University of Portsmouth, United Kingdom

REVIEWED BY
Jinming Du,
University of Otago, New Zealand
Otmane EL Hosayny,
Universite Chouaib Doukkali Faculte des Lettres et des Sciences Humaines, Morocco

*CORRESPONDENCE
Yara Abdelaty
yara.abdelaty@edu.psu.edu.eg

RECEIVED 29 June 2026
REVISED 21 July 2026
ACCEPTED 28 July 2026
PUBLISHED 09 November 2026

CITATION
Alshammari SH and Abdelaty Y (2026) Interactive AI tools, personalized feedback, and EFL learners' intention to use AI: an extended TAM study in Egyptian higher education.
Front. Educ. 11:1923377.
doi: 10.3389/feduc.2026.1923377

COPYRIGHT
© 2026 Alshammari and Abdelaty. This is an open-access article distributed under the terms of the Creative Commons Attribution License (CC BY). The use, distribution or reproduction in other forums is permitted, provided the original author(s) and the copyright owner(s) are credited and that the original publication in this journal is cited, in accordance with accepted academic practice. No use, distribution or reproduction is permitted which does not comply with these terms.

Interactive AI tools, personalized feedback, and EFL learners' intention to use AI: an extended TAM study in Egyptian higher education

Sultan Hammad Alshammari[1] and Yara Abdelaty[2]*

[1]Department of Educational Technology, College of Education, University of Ha'il, Saudi Arabia, [2]Faculty of Education, Port Said University, Egypt

Introduction: Despite the growing use of generative artificial intelligence (AI) in English as a Foreign Language (EFL) education, how interactive AI features and personalized learning feedback shape learners' acceptance remains insufficiently understood. This study examines their influence on Egyptian university students' behavioral intention to use AI tools through an extended Technology Acceptance Model (TAM), focusing on the mediating roles of perceived usefulness and perceived ease of use.
Methods: An explanatory sequential mixed-methods design was employed. Survey data from 596 Egyptian university students were analyzed using structural equation modeling (SEM), followed by thematic analysis of semi-structured interviews with eight purposively selected participants.
Results: Perceived usefulness and perceived ease of use significantly predicted behavioral intention. Interactive AI features influenced intention indirectly through perceived usefulness, whereas personalized learning feedback influenced intention indirectly through perceived ease of use. Interviews revealed that interactivity supported engagement, clarification, and learner control, while personalized feedback facilitated error correction, reduced ambiguity, and alleviated anxiety. Participants viewed AI tools as flexible learning support rather than replacements for human instruction.
Discussion: The findings highlight the importance of pedagogically meaningful interaction and personalized feedback in shaping EFL learners' acceptance of AI tools. Responsible integration should emphasize learner agency, critical evaluation of AI-generated responses, and continued human pedagogical guidance.

KEYWORDS
artificial intelligence in education, behavioral intention, EFL learners, higher education, human pedagogical guidance, interactive AI tools, personalized feedback, technology acceptance model

1 Introduction

English, as a global lingua franca, plays a key role in international communication, academic exchange, and professional development in EFL higher education contexts (Hessel, 2019; Jeong, 2021), prompting university students to seek effective tools to improve proficiency, confidence, and independent learning (Almusharraf and Bailey, 2025). Generative AI tools such as ChatGPT are reshaping this landscape by offering

real-time interaction, adaptive support, and personalized feedback, creating more flexible, learner-centered learning opportunities (Adiguzel et al., 2023; Law, 2024; Yolcu, 2023). Within EFL contexts, where learners often have limited opportunities for authentic practice and individualized feedback, such tools are increasingly viewed as a means of supporting proficiency development, learner autonomy, and confidence alongside traditional instruction (Kohnke and Zou, 2025).

Across the Middle East and North Africa, AI adoption in higher education is growing but remains uneven. In their study, Al-Zahrani and Alasmari (2025) surveyed 508 participants from 259 institutions across 19 countries and found that 43.9% of institutions were still at an early stage of AI adoption, while adaptive learning platforms and AI-enhanced research tools were among the most common applications. They also identified financial constraints, infrastructure limitations, unclear policies, and insufficient training as persistent barriers, although AI-driven personalization was strongly associated with student engagement.

Egypt provides a particularly important context because universities are pursuing digital transformation while still facing inequalities in infrastructure, AI literacy, institutional policy, and access to technology (Ghaly, 2026; Mohamed et al., 2025). In a study of 742 academics at Egyptian universities, Eldakar et al. (2025) found that AI self-efficacy, social influence, and perceived ethics significantly shaped perceived usefulness, perceived ease of use, and intention to adopt generative AI. Facilitating conditions negatively influenced perceived ease of use, suggesting that existing institutional support and technical arrangements may not yet consistently facilitate adoption. Student-focused evidence supports this contextual concern. Mohamed et al. (2025), in a cross-sectional study involving 1,055 undergraduate nursing students from Egypt, Jordan, Saudi Arabia, and Yemen, found that performance expectancy, effort expectancy, facilitating conditions, and social influence significantly predicted behavioral intention to use generative AI, while anxiety played a significant moderating role. Their findings emphasize that adoption depends not only on access to AI tools but also on institutional support, emotional readiness, and social context.

Evidence from Egyptian EFL education further suggests that perceived usefulness does not necessarily guarantee pedagogical suitability. Mekheimer (2026) found that students perceived ChatGPT as more useful than teachers did, whereas teachers regarded it as less compatible with their pedagogical work; both groups also expressed concerns about academic integrity and student deskilling. ElEbyary and Shabara (2024) reported that ChatGPT could provide immediate and generally comprehensible corrective feedback, although its responses were sometimes overly lengthy or insufficiently direct. Shabara et al. (2024) likewise found only moderate scoring consistency and weak-to-moderate agreement between ChatGPT and trained teachers, reinforcing the need for teacher oversight and critical AI literacy. Together, these studies indicate that the educational value of generative AI may depend on the quality of its interaction and feedback rather than on availability alone.

The Technology Acceptance Model identifies perceived usefulness and perceived ease of use as central predictors of behavioral intention, and research in educational settings has consistently confirmed the importance of these perceptions in shaping technology adoption (Davis, 1989; Teo, 2011; Venkatesh et al., 2003; Venkatesh and Davis, 2000). Existing Egyptian and regional research has mainly examined broad acceptance determinants, including usefulness, ease of use, self-efficacy, social influence, facilitating conditions, trust, ethics, and anxiety (Eldakar et al., 2025; Mohamed et al., 2025; Razzouki et al., 2025; Strzelecki and ElArabawy, 2024). More broadly, prior research has largely focused on learners' general perceptions of AI tools and their overall attitudes toward AI-supported language learning (Huang, 2025; Meniado et al., 2024; Teng, 2024). Other studies have examined differences between student and teacher perceptions (Mekheimer, 2026) or institutional readiness and implementation barriers (Al-Zahrani and Alasmari, 2025). Nevertheless, a more specific pedagogical gap remains. Limited research has investigated how particular AI affordances especially interactive AI features and personalized learning feedback shape perceived usefulness, perceived ease of use, and behavioral intention among Egyptian EFL university students. The present study addresses this gap by extending TAM with these two pedagogically relevant antecedents.

2 Literature review

2.1 AI affordances and learners' acceptance in EFL

Artificial intelligence is increasingly recognized as an important development in EFL teaching and learning because contemporary AI tools can provide interactive practice, adaptive explanations, and individualized feedback that respond to learners' input and needs (Godwin-Jones, 2023; Kohnke and Zou, 2025; Lyu et al., 2026). Unlike earlier rule-based systems, such as programmed grammar checkers and scripted chatbots that relied on predefined rules and responses, contemporary technologies including large language models, conversational agents, speech-recognition systems, and intelligent tutoring tools can generate adaptive, interactive, and context-sensitive responses (Godwin-Jones, 2023; Xiao, 2025). By responding to individual input, these systems can provide more immediate and flexible assistance than many earlier educational technologies (Chen et al., 2020; Liu et al., 2025; Wei, 2023).

Research on AI-supported language teaching and learning has reported benefits across several areas, including language practice, writing support, learner engagement, motivation, and self-directed learning (Du and Alm, 2024; Fathi et al., 2024; Song and Song, 2023; Xiao, 2025). AI-generated feedback may also support error identification, revision, and writing development, although its effectiveness depends on its accuracy, clarity, and suitability for learners' proficiency (ElEbyary and Shabara, 2024; Shabara et al., 2024). Much of this research, however, has concentrated on learning outcomes or AI-generated assessment rather than on how specific pedagogical affordances shape learners' acceptance and continued-use intention (Mizumoto and Eguchi, 2023; Yancey et al., 2023).

Two affordances are particularly relevant to the first objective of this study: interactive AI features and personalized learning feedback. Interactive AI features refer to the capacity of AI systems to support responsive and adaptive exchanges by

addressing learner input, enabling follow-up questions, providing clarification, and allowing users to influence the pace and direction of interaction (Lyu et al., 2026). Interaction has long been considered central to second-language learning because it creates opportunities for negotiation of meaning, corrective responses, and modified output (Chapelle, 2001; Long, 1996). Conversational AI can extend opportunities for language interaction by enabling learners to ask follow-up questions, request clarification, test alternative expressions, and continue an exchange until understanding is achieved (Kim, 2023; Lyu et al., 2026). In their study, Lyu et al. (2026) found that responsiveness, personalization, learner control, and engagement significantly influenced EFL learners' perceived usefulness, perceived ease of use, and behavioral intention.

Research on chatbots, virtual assistants, and intelligent tutoring systems indicates that interactive dialogue can support knowledge construction, engagement, and learner-centred instruction (Kim, 2023; Ng et al., 2023). These tools may also approximate some features of individual tutoring by offering immediate clarification and allowing learners to refine their language through repeated exchanges (Peng and Liang, 2026; Wang et al., 2025). Adaptive tasks and targeted explanations may further increase relevance and motivation (De la Vall and Araya, 2023; Sajja et al., 2024). In acceptance terms, such responsiveness may increase perceived usefulness because learners can experience the tool as directly beneficial for communicative practice, clarification, and problem solving (Lyu et al., 2026; Wei, 2023).

Personalized feedback is the second focal affordance. Effective feedback is generally timely, specific, understandable, actionable, and aligned with learners' needs and performance (Hattie and Timperley, 2007; Shute, 2008). When feedback is clear and actionable, it can reduce ambiguity and cognitive overload, helping learners translate guidance into improvement (Abdelaty et al., 2025; Rahman and Watanobe, 2023). Feedback richness and adaptivity are therefore central to its effectiveness in digital learning environments (Maier and Klotz, 2022). AI systems can extend these principles by generating immediate, context-sensitive guidance based on learners' errors, goals, and progress (Hwang et al., 2020; Wei, 2023). Research suggests that large-language-model feedback can support self-correction, productive language skills, revision, writing accuracy, and cognitive, behavioural, and affective engagement (Fincham and Alvarez, 2024; Ma et al., 2026; Zhang and Hashemifardnia, 2026). It may also support self-regulation by helping learners monitor progress and adapt learning strategies (Wang and Lehman, 2021).

AI-generated feedback is most useful when it is clear, specific, accurate, and suited to learners' needs; vague or complex feedback may increase cognitive effort (Abdelaty et al., 2025; Elmotri et al., 2025). Interactivity and personalized feedback were selected because they are task-level pedagogical affordances that learners experience directly during EFL activities. Interactivity reflects the responsive, dialogic nature of generative AI, whereas personalized feedback reflects its ability to tailor guidance to individual performance. Therefore, interactivity is proposed as an antecedent of perceived usefulness, while personalized feedback is proposed as an antecedent of perceived ease of use (Lyu et al., 2026).

2.2 Factors shaping behavioral intention to use generative AI

Behavioral intention to use generative AI is influenced by a broad range of technological, individual, social, ethical, and institutional factors. Within the Technology Acceptance Model, perceived usefulness and perceived ease of use are central determinants of intention. Learners are more likely to adopt generative AI when they believe that it improves their learning performance and can be used with limited effort (e.g., Abdelaty et al., 2025; Davis, 1989; Kazykhankyzy et al., 2026; Venkatesh et al., 2003). These perceptions may be shaped by the specific affordances that learners encounter, particularly interactivity and personalized feedback, which enhance learners' perceptions of usefulness and ease of use and, consequently, their intention to adopt generative AI (Lyu et al., 2026; Wang and Yu, 2026; Wu and Chiu, 2025).

However, the wider literature shows that acceptance cannot be explained by technological features alone. AI literacy and digital competence affect whether learners understand how AI systems operate, formulate effective prompts, evaluate AI-generated content, and use the technology responsibly (Knoth et al., 2024). Learners with stronger AI literacy are more likely to recognize the value of AI and perceive it as manageable, whereas limited competence may constrain adoption even when access is available (Börekci and Çelik, 2024). Using a cross-sectional survey and PLS-SEM, Sun et al. (2026) found among 1,536 Chinese university students that AI awareness and evaluative competence improved attitudes toward generative AI, which in turn strengthened behavioral intention.

Self-efficacy is similarly important because learners who believe they can use AI successfully are more likely to view it as useful and manageable. In a survey of 943 undergraduate students from 140 Turkish universities, Ursavaş et al. (2025) found that self-efficacy significantly predicted behavioral intention to use generative AI. Similarly, Zhao et al. (2025), using PLS-SEM with data from 498 university students, found that self-efficacy significantly increased both perceived usefulness and perceived ease of use. Trust is also an important determinant of AI adoption because users must judge whether AI systems are reliable, transparent, and ethically acceptable. In Moroccan higher education, Razzouki et al. (2025) found that perceived usefulness, perceived ease of use, and perceived efficiency significantly influenced AI adoption, while trust strengthened the relationship between adoption and effective use.

Social and institutional factors also influence acceptance. For example, Yakubu et al. (2025) surveyed 289 Nigerian university students and, using SEM based on the UTAUT framework, found that social influence significantly predicted students' behavioral intention to use generative AI for learning and research. Facilitating conditions, including access to devices, reliable internet, technical support, training, and compatibility with existing learning systems, are also important. Cabero-Almenara et al. (2025) reported that supportive technological and organizational conditions significantly predicted students' use of generative AI. Institutional policies and teacher guidance may further support adoption by clarifying acceptable practices, ethical boundaries, and appropriate forms of AI assistance, as Gokturk-Saglam (2026) showed that teachers' guidance and

classroom norms influenced how learners engaged with generative AI in English education.

Prior AI experience can also shape acceptance. In a survey of 400 Spanish university students, Romero-Rodríguez et al. (2023) found that prior experience with ChatGPT was associated with higher scores across all adoption constructs and directly influenced behavioral intention. Similarly, Zou and Huang (2023) reported that doctoral students' previous ChatGPT use significantly increased perceived ease of use. However, experience does not necessarily guarantee effective or ethical use; a mixed-method study of 607 Hungarian university students found that prior AI experience influenced usage and perceptions but also revealed concerns about misuse and plagiarism (Fajt and Schiller, 2025). García-Alonso et al. (2024) likewise showed that prior experience was linked to more favorable attitudes, while emphasizing the need for structured training on AI's strengths and limitations. Together, these findings indicate that behavioral intention is multidimensional and cannot be explained solely by the pedagogical features included in the present model.

2.3 Technology acceptance model and the proposed research model

The Technology Acceptance Model (TAM) explains technology adoption through perceived usefulness and perceived ease of use, which shape behavioral intention (Davis, 1989; Venkatesh and Davis, 2000). Perceived usefulness concerns whether a technology helps users achieve relevant goals, whereas perceived ease of use refers to the effort required to use it. TAM has been widely applied and extended in educational technology research (Al-Emran et al., 2018; Martín-García et al., 2022; Sun and Mei, 2022). However, it gives limited attention to pedagogical features such as interaction and feedback (Bagozzi, 2007). This limitation is important for generative AI because learners experience these tools through dialogue, explanations, and task support.

The present study therefore extends TAM by incorporating interactive AI features and AI-generated personalized feedback. Interactive features are expected to increase perceived usefulness because dialogue, clarification, and adaptive responses can help learners complete language-learning tasks more effectively (Lyu et al., 2026; Wei, 2023). Personalized feedback is expected to increase perceived ease of use because individualized guidance can reduce uncertainty, clarify errors, and support revision (Fincham and Alvarez, 2024; Maier and Klotz, 2022). Perceived usefulness and perceived ease of use are then expected to predict behavioral intention. Learner agency and human–AI partnership provide a broader pedagogical context but are not measured in the model. The model is therefore limited to interactive AI features, personalized feedback, perceived usefulness, perceived ease of use, and behavioral intention. Accordingly, the following hypotheses are proposed:

H1: Perceived usefulness positively affects behavioral intention to use AI tools.

H2: Perceived ease of use positively affects behavioral intention to use AI tools.

H3: Interactive AI features positively affect perceived usefulness.

H4: AI-generated personalized feedback positively affects perceived ease of use.

Overall, the model offers a focused extension of TAM by linking two pedagogically relevant AI affordances to the core acceptance beliefs. The proposed relationships are shown in Figure 1.

3 Methodology

3.1 Research design

This study adopted a sequential explanatory mixed-methods design (Creswell and Plano Clark, 2011) to provide a comprehensive understanding of EFL learners' intention to use intelligent tools for English language learning. In this approach, the quantitative phase was conducted first to examine the hypothesized relationships among the study variables using structural equation modeling (SEM), enabling the testing of the proposed research model. The qualitative phase was then implemented to extend and explain the quantitative findings by offering deeper insight into learners' experiences. It specifically explored how participants interpreted and engaged with key constructs such as personalized feedback, interactive features, and perceived ease of use within their learning contexts. By capturing learners' perspectives, this phase helped clarify the factors underlying the statistical relationships identified in the quantitative analysis.

3.2 Context and participants

This study was conducted in Egyptian higher education, where English is taught as a foreign language (EFL). Participants were recruited from one public and one private university in Egypt through the second author's academic networks. The second author holds a full-time academic position at the public university and a part-time teaching position at the private university, which facilitated access to students in both institutional settings. The institutions are identified by type rather than by name to preserve institutional confidentiality. Evidence from Egyptian EFL higher education suggests that students' use of generative AI may extend beyond formally structured classroom integration, highlighting the need for clearer pedagogical guidance and institutional support (Mekheimer, 2026).

For the quantitative phase, convenience sampling was used because of participant accessibility (Etikan et al., 2016). The questionnaire was distributed through available student communication channels, including university email lists and learning platforms, and yielded 596 completed responses. Eligible participants were students enrolled in Egyptian higher education institutions and studying English as a foreign language. Participation was voluntary, and informed consent was obtained before completion of the questionnaire. The sample included 276 male students (46.3%) and 320 female students (53.7%). Most participants were undergraduates (84.6%), whereas 15.4% were postgraduate students. The sample was concentrated in the first and second academic years, which together accounted for 83.4% of respondents. Participants represented several academic disciplines, although students from the Faculties of Education and

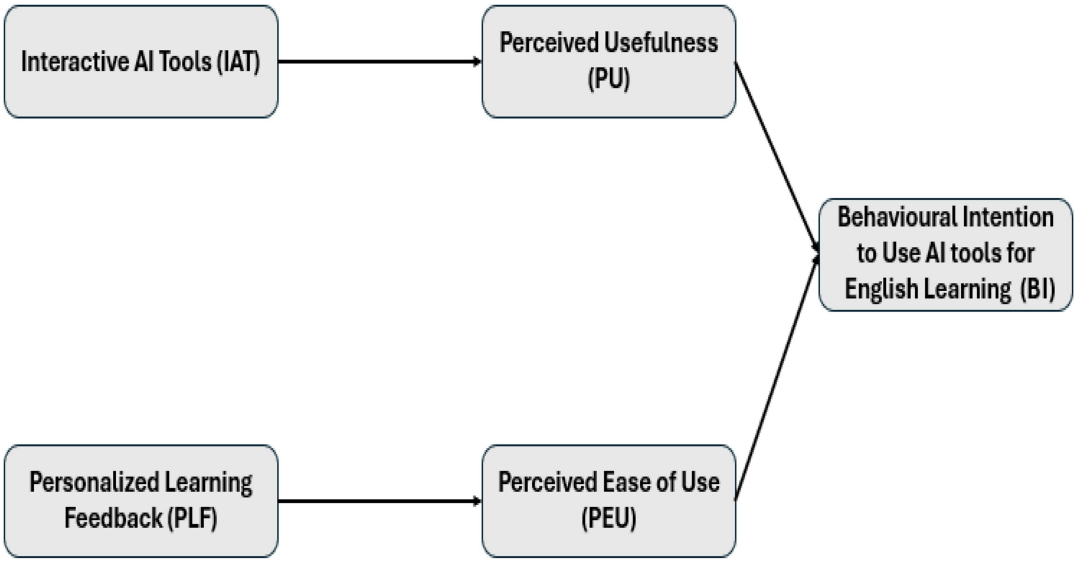

FIGURE 1
The proposed research model.

Medicine constituted the largest groups. Regarding prior AI use, 81.0% reported having used ChatGPT or similar AI tools for English learning, whereas 19.0% reported no such experience. Smartphones were the most commonly reported access device. In addition, 16.3% had received formal training, 48.0% had learned to use AI tools independently, and 35.7% reported neither formal training nor self-directed learning.

The study was designed to test the proposed relationships within the extended Technology Acceptance Model rather than compare demographic or institutional subgroups. University affiliation was not recorded as a separate questionnaire item; therefore, the distribution of respondents across the two institutions and possible differences associated with university type could not be examined. Academic discipline, educational level, prior AI use, and training background were also not included as control variables in the structural model. Differences between undergraduate and postgraduate students, academic disciplines, and participants with different levels of AI experience or training were not examined separately. These factors are acknowledged as possible influences on perceived usefulness, perceived ease of use, and behavioral intention and are discussed in the Limitations section.

For the qualitative phase, eight participants were purposively selected to reflect variation in academic background, educational level, and AI experience. The qualitative sample included undergraduate students and one postgraduate trainee teacher, allowing the interviews to capture perspectives from participants with different educational and professional backgrounds.

3.3 Quantitative data collection and analysis

Quantitative data were collected using an online questionnaire based on the Technology Acceptance Model (TAM). The instrument comprised demographic questions and measures of five latent constructs: Personalized Learning Feedback (PLF), Interactive AI Tools (IAT), Perceived Usefulness (PU), Perceived Ease of Use (PEU), and Behavioral Intention (BI). The PLF and IAT items were adapted from Yaseen et al. (2025), whereas the PU, PEU, and BI items were adapted from Davis (1989). Minor wording modifications were made to contextualize the items for AI-supported English language learning while preserving the original meaning of the constructs. The complete questionnaire, including all measurement items and their corresponding sources, is provided in Supplementary Appendix A.

The questionnaire was translated into Arabic using a translation and independent back-translation procedure to ensure semantic equivalence between the English and Arabic versions. The translated instrument was subsequently reviewed by three experts in educational technology and EFL education to evaluate content validity, clarity, and contextual appropriateness. Based on their feedback, minor wording refinements were made. A pilot study involving 30 university students was then conducted to assess item clarity and preliminary reliability. The pilot participants were excluded from the final sample. The pilot results indicated that the questionnaire was clear and understandable, and only minor wording revisions were required. No measurement items were removed prior to the confirmatory factor analysis (CFA). All measurement items were rated on a five-point Likert scale ranging from 1 (strongly disagree) to 5 (strongly agree), with higher scores indicating greater agreement with the corresponding statements.

The final questionnaire was administered online via Google Forms through university email lists and student learning platforms, resulting in 596 valid responses. Data were analyzed using SPSS 29 and AMOS 26. After screening for missing data, outliers, and normality, the measurement model was evaluated by assessing common method bias, reliability, convergent validity, discriminant validity, and overall model fit before conducting confirmatory factor analysis (CFA) and structural equation modeling (SEM) to test the hypothesized relationships and indirect effects.

Because all data were collected using a self-administered questionnaire at a single point in time, procedural and statistical remedies were implemented to minimize the potential influence

of common method bias (Podsakoff et al., 2003). Procedurally, participants were assured of the anonymity and confidentiality of their responses, participation was voluntary, and they were informed that there were no right or wrong answers, thereby reducing evaluation apprehension. In addition, the questionnaire consisted of clearly worded items adapted from previously validated scales. Statistically, Harman's single-factor test was conducted by loading all measurement items into an unrotated exploratory factor analysis. The first unrotated factor accounted for 39.57% of the total variance, which is below the recommended threshold of 50%, indicating that common method bias is unlikely to have materially influenced the study findings.

3.4 Qualitative data collection and analysis

To explain and contextualize the quantitative findings, semi-structured interviews were conducted with eight purposively selected participants: seven undergraduate students and one postgraduate trainee teacher. Selection aimed to capture variation in academic background, study level, prior AI experience, frequency of AI use, and perceptions of usefulness and ease of use. Detailed participant characteristics are presented in Supplementary Appendix B (see Table B1).

The interviews were conducted in Arabic via Zoom, lasted approximately 30–50 min, and explored participants' experiences of interactive AI features, personalized feedback, perceived usefulness, perceived ease of use, and continued-use intention (see Supplementary Appendix C for the semi-structured interview guide). With consent, the interviews were audio-recorded, transcribed verbatim, anonymized, and translated into English. Selected quotations were checked against the Arabic transcripts to preserve their intended meaning.

The data were analyzed using codebook thematic analysis informed by Braun and Clarke (2021) six-phase procedure. Coding followed a hybrid deductive–inductive strategy: initial codes were derived from the conceptual model and quantitative findings, while additional codes captured emerging experiences such as psychological safety, flexibility, accuracy concerns, and teacher guidance. Two researchers independently coded an initial subset of transcripts to compare interpretations and refine the codebook. Differences were resolved through discussion and consensus, after which the revised codebook was applied to the remaining transcripts. A third researcher reviewed the themes and supporting extracts to strengthen analytical coherence. Trustworthiness was supported through an audit trail, reflexive notes, repeated checking against the transcripts, and illustrative participant quotations.

4 Findings

4.1 Quantitative results

This section presents the key quantitative findings from the study, beginning with a descriptive overview of participant demographics and followed by measurement validation, hypothesis testing, and mediation analysis based on the extended Technology Acceptance Model (TAM). The analysis offers insights into how perceived ease of use, perceived usefulness, personalized learning feedback, and interactive AI tools influence EFL learners' behavioral intention to adopt AI tools for English language learning.

A total of 596 university students participated in the survey. As shown in Table 1, the sample was relatively gender-balanced, with 53.7% female and 46.3% male participants. Most were undergraduates (84.6%) and were mainly in their first or second academic year. Participants represented several academic disciplines, particularly Education and Medicine. Most respondents (81.0%) had used ChatGPT or similar AI tools for English learning. Smartphones were the main access device (68.6%). Only 16.3% had received formal training, while 48.0% were self-taught, indicating that AI use was largely based on independent learning.

4.1.2 Confirmatory factor analysis (CFA)

Confirmatory Factor Analysis (CFA) was conducted using AMOS to evaluate the measurement model's adequacy and

TABLE 1 Demographic characteristics of participants.

Variable	Category	Frequency	Percent
Gender	Male	276	46.3%
	Female	320	53.7%
Educational level	Undergraduate	504	84.6%
	Postgraduate	92	15.4%
Academic year	First	330	55.4%
	Second	167	28.0%
	Third	48	8.1%
	Fourth	41	6.9%
	Fifth	10	1.7%
Faculty	Education	239	40.1%
	Medicine	127	21.3%
	Engineering	65	10.9%
	Business Administration	55	9.2%
	Arts	35	5.9%
	Science	26	4.4%
	Other	49	8.2%
Used ChatGPT for English learning	Yes	483	81.0%
	No	113	19.0%
Device used	Smartphone	409	68.6%
	Laptop	25	4.2%
	Tablet	17	2.9%
	More than one device	145	24.3%
Received ChatGPT Training	Yes (formal)	97	16.3%
	No	213	35.7%
	Self-learning	286	48.0%
Total		596	100.0%

establish the construct validity of the latent variables. The model included five constructs central to the extended Technology Acceptance Model (TAM): Personalized Learning Feedback (PLF), Interactive AI Tools (IAT), Perceived Usefulness (PU), Perceived Ease of Use (PEU), and Behavioral Intention (BI). As a critical step in covariance-based structural equation modeling (CB-SEM), CFA ensures that the observed indicators adequately represent their corresponding latent variables prior to testing structural relationships (Awang, 2015; Hair et al., 2019).

4.1.3 Model fit assessment

As shown in Figure 2, the overall measurement model demonstrated a good fit to the data. The fit indices met or exceeded commonly accepted thresholds recommended in the SEM literature. Specifically, the chi-square to degrees of freedom ratio was within the acceptable range (χ^2/df = 2.802), indicating an adequate model fit. Incremental fit indices further supported the adequacy of the model, with values exceeding the recommended cut-off of 0.90: CFI = 0.964, TLI = 0.958, IFI = 0.964, and NFI = 0.945. In addition, the absolute fit index RMSEA = 0.055 fell below the threshold of 0.08, suggesting a reasonable approximation of the model to the population covariance matrix (Awang, 2015; Hair et al., 2019). Overall, these indices indicate that the proposed measurement model fits the observed data well and is suitable for subsequent structural analysis.

Convergent validity was evaluated using composite reliability (CR) and average variance extracted (AVE) in accordance with the criteria recommended by Awang (2015) and Hair et al. (2019). As shown in Table 2, all constructs demonstrated satisfactory CR values ranging from 0.851 to 0.927, exceeding the recommended threshold of 0.70. Similarly, AVE values ranged from 0.588 to 0.720, all above the minimum acceptable level of 0.50, indicating that each construct explained a substantial proportion of variance in its indicators. These results confirm that convergent validity was achieved for all constructs included in the measurement model.

Discriminant validity was assessed using the Heterotrait–Monotrait ratio (HTMT), which is widely regarded as a robust criterion for evaluating construct distinctiveness in structural equation modeling (Awang, 2015; Hair et al., 2019). As shown

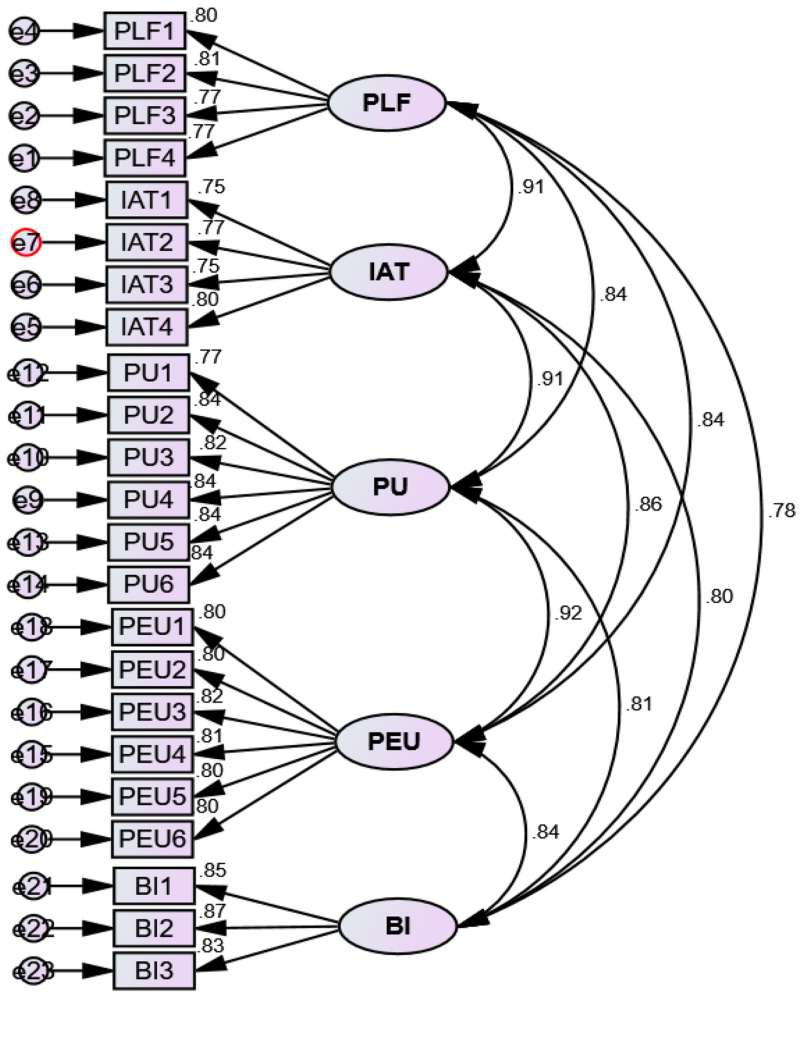

FIGURE 2
CFA output.

TABLE 2 CR and AVE values.

Construct	CR	AVE
PEU	0.917	0.649
PLF	0.867	0.620
IAT	0.851	0.588
PU	0.927	0.681
BI	0.885	0.720

TABLE 3 Heterotrait–Monotrait ratio (HTMT) for discriminant validity.

Constructs	PLF	IAT	PU	PEU	BI
PLF	—	0.90	0.83	0.84	0.78
IAT		—	0.86	0.86	0.80
PU			—	**0.90**	0.82
PEU				—	0.84
BI					—

in Table 3, the HTMT values were generally within the recommended threshold of 0.90, indicating acceptable discriminant validity among the study constructs. Although the HTMT values for the PLF–IAT and PU–PEU construct pairs approached the upper threshold (HTMT = 0.90), these associations are theoretically plausible. Interactive AI features and personalized feedback represent closely related pedagogical affordances that frequently operate together in AI-supported language learning, while perceived usefulness and perceived ease of use are well-established as highly correlated constructs within the Technology Acceptance Model (Davis, 1989; Venkatesh and Davis, 2000). Therefore, although the results suggest a relatively high degree of association between these construct pairs, the values remained within the recommended criterion, supporting the retention of the constructs as conceptually distinct for the purposes of the proposed model.

4.1.4 Standardized estimates

The structural model was evaluated using standardized estimates to assess factor loadings, relationships among constructs, and overall explanatory power. All factor loadings exceeded the recommended threshold of 0.60, indicating strong item representation of the latent variables (Awang, 2015; Hair et al., 2019) and supporting the robustness of the measurement model. The standardized path coefficients showed meaningful relationships among constructs, with interactive AI tools (IAT) having a strong positive effect on perceived usefulness (PU) and personalized learning feedback (PLF) strongly influencing perceived ease of use (PEU). In turn, both PU and PEU positively affected behavioral intention (BI), confirming their central role in shaping learners' adoption of AI tools for English learning. The model's explanatory power, assessed using R^2, showed that 72% of the variance in behavioral intention was explained ($R^2 = 0.72$). According to Cohen (1988), this represents a large effect size, indicating that the model effectively captures the key factors influencing EFL learners' intention to use AI tools. Figure 3 presents the standardized estimates.

4.1.5 Unstandardized estimates

In addition to standardized estimates, the unstandardized regression weights were examined, as they are essential for calculating the critical ratio (CR) and testing the statistical significance of the hypothesized relationships in covariance-based structural equation modeling. Unlike standardized estimates, unstandardized estimates preserve the original measurement scale of the variables and are directly used by AMOS to compute the CR values, which function similarly to t-statistics (Awang, 2015; Hair et al., 2019). Figure 4 presents the unstandardized structural equation model.

4.1.6 Structural model results and hypothesis testing

The structural model was evaluated using unstandardized regression weights to test the proposed hypotheses. All relationships were statistically significant, with critical ratio values exceeding ±1.96 and p-values below.001, providing strong support for the model. Perceived usefulness (PU) had a significant positive effect on behavioral intention (BI) ($\beta = 0.346$, S.E. = 0.070, C.R. = 4.967, p < .001), supporting H1 and indicating that learners are more likely to adopt AI tools when they perceive them as beneficial. Perceived ease of use (PEU) also showed a strong positive effect on behavioral intention ($\beta = 0.710$, S.E. = 0.077, C.R. = 9.267, $p < .001$), supporting H2 and highlighting its role as a key determinant of AI adoption.

In addition, AI personalized learning feedback (PLF) significantly influenced perceived ease of use ($\beta = 0.980$, S.E. = 0.051, C.R. = 19.326, $p < .001$), supporting H4 and suggesting that feedback enhances usability. Similarly, interactive AI tools (IAT) had a strong positive effect on perceived usefulness ($\beta = 1.031$, S.E. = 0.048, C.R. = 21.657, $p < .001$), supporting H3 and showing that interactive features increase perceived usefulness. Overall, these results confirm that both pedagogical and technological factors shape learners' perceptions and intentions to use AI tools, consistent with the extended TAM. Table 4 presents the regression results.

4.1.7 Indirect effects analysis

To further examine the underlying mechanisms through which interactive AI tools (IAT) and personalized learning feedback (PLF) influence EFL learners' behavioral intention (BI) to use AI tools for English language learning, indirect effects were analyzed using mediation analysis. The results revealed a significant indirect effect of IAT on BI through perceived usefulness (PU) ($\beta = 0.357$, $p = .013$), indicating that interactive AI tools enhance learners' intention to use AI tools by increasing their perceptions of usefulness. This finding suggests that the impact of interactivity on behavioral intention operates primarily through learners' evaluations of how beneficial AI tools are for their English learning.

Similarly, the analysis demonstrated a strong and significant indirect effect of PLF on BI via perceived ease of use (PEU)

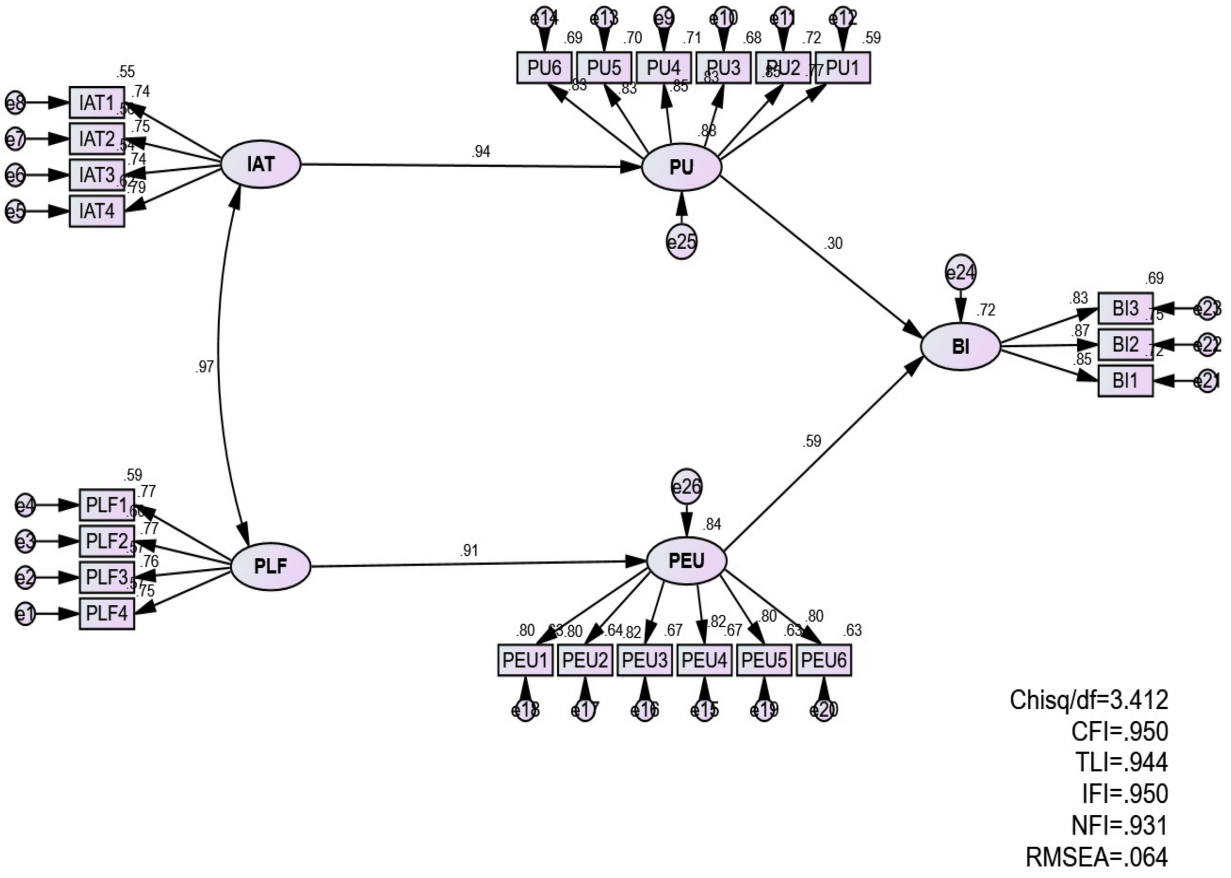

FIGURE 3
Standardized structural equation model.

($\beta = 0.696$, $p < .001$). This result indicates that AI-generated personalized learning feedback substantially enhances learners' intention to adopt AI tools by improving their perceptions of ease of use. In other words, when AI systems provide tailored and supportive feedback, learners are more likely to perceive these tools as easy to use, which in turn increases their behavioral intention. Table 5 presents the Results of the Indirect Effects.

To further examine the mechanisms through which Interactive AI Tools (IAT) and Personalized Learning Feedback (PLF) influence EFL learners' Behavioral Intention (BI) to use AI tools for English language learning, indirect effects were examined using a bias-corrected bootstrap procedure with 5,000 bootstrap samples and 95% confidence intervals. An indirect effect was considered statistically significant when the confidence interval did not include zero.

The results revealed a significant indirect effect of IAT on BI through Perceived Usefulness (PU) [$\beta = 0.357$, 95% BC CI (.079,.643), $p = .013$], indicating that perceived usefulness serves as an important mechanism through which interactive AI tools enhance learners' intention to use AI tools for English language learning.

Similarly, PLF had a significant indirect effect on BI through Perceived Ease of Use (PEU) [$\beta = 0.696$, 95% BC CI (.426,.996), $p < .001$]. This finding suggests that AI-generated personalized learning feedback increases learners' behavioral intention by improving their perceptions of ease of use. In both cases, the bootstrap confidence intervals excluded zero, providing additional support for the significance of the indirect effects. The results are presented in Table 5.

4.2 Qualitative results

While the quantitative phase examined the relationships among perceived usefulness, perceived ease of use, and behavioral intention, the qualitative findings provided deeper insight into how learners experienced and interpreted AI-supported language learning. The interviews showed that learners did not view AI tools simply as sources of information. Rather, they used them as interactive, flexible, and supportive learning resources. Four themes were identified: (1) perceived usefulness through interactive engagement, (2) personalized feedback as a facilitator of learning and ease of use, (3) AI tools as psychologically safe and flexible learning environments, and (4) learner agency and the need for human guidance.

4.2.1 Perceived usefulness through interactive engagement

A consistent pattern across participants was the role of interaction in shaping perceived usefulness. Learners described

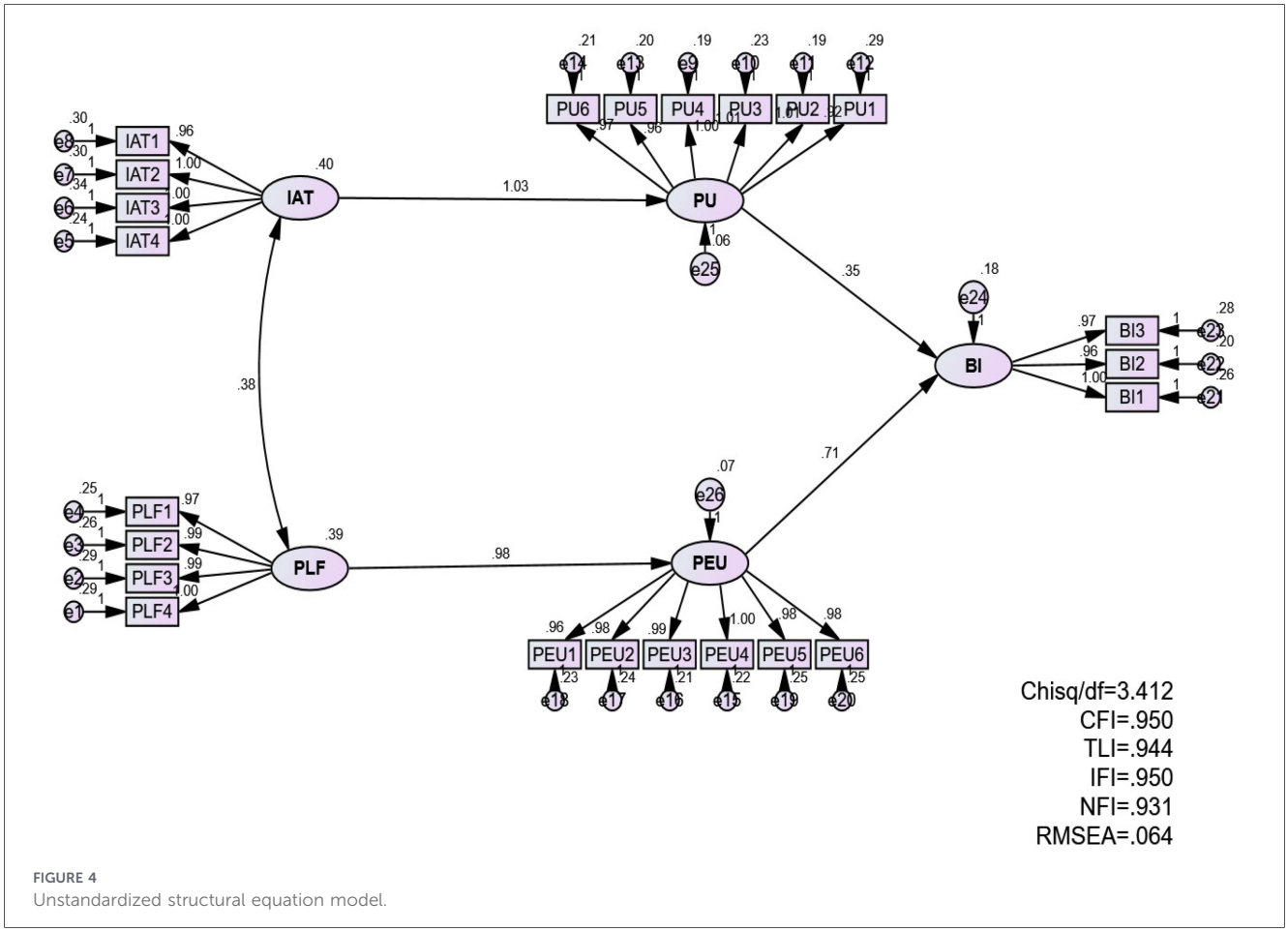

FIGURE 4
Unstandardized structural equation model.

TABLE 4 Results of regression weights.

Path	Estimate	S.E.	C.R.	p	Hypothesis	Decision
BI ← PU	.346	.070	4.967	<.001	H1	Supported
BI ← PEU	.710	.077	9.267	<.001	H2	Supported
PU ← IAT	1.031	.048	21.657	<.001	H3	Supported
PEU ← PLF	.980	.051	19.326	<.001	H4	Supported

TABLE 5 Results of the bootstrap indirect effects analysis.

Indirect Path	Indirect effect (β)	95% BC CI	*p*-value	Result
IAT → PU → BI	0.357	[.079,.643]	.013	Significant
PLF → PEU → BI	0.696	[.426,.996]	<.001	Significant

AI tools as responsive systems that allowed them to ask questions, request clarification, and continue the interaction until they understood. Usefulness was therefore linked not only to receiving answers, but also to the opportunity for ongoing dialogue.

Ahmad, an English major, explained:

> You can't really understand grammar just by reading a book. With ChatGPT, I can ask questions and get explanations until I understand. It's like having a private teacher. When I ask, it explains step by step, and I can keep asking until everything becomes clear.

This perception of AI as an interactive tutor was also reflected in Khaled's account. He explained that AI helped him organize and develop his ideas through follow-up questions:

> When I don't know how to express something, I ask follow-up questions. It helps me organize my ideas. It's not just giving answers; it helps me reach the answer.

Participants also reported that repeated interaction increased engagement and encouraged active learning. As Salma stated:

> I can ask again and again until I fully understand. This makes me more involved instead of just memorizing.

These responses suggest that interactive AI features contributed to perceived usefulness by supporting clarification, practice, and active engagement with language tasks.

4.2.2 Personalized feedback as a facilitator of learning and ease of use

Another dominant theme was the role of AI-generated personalized feedback in making learning more manageable. Participants valued feedback that was immediate, clear, and adaptable to their needs. Ease of use was therefore not limited to the technical simplicity of the tool; it also included the extent to which AI feedback helped learners understand errors and decide how to improve.

Ahmad described how he used AI feedback to review his writing without losing control over the revision process:

> I write a paragraph and ask, 'Is it correct?' I want it to show my mistakes, not change everything. This helps me improve step by step and understand my errors.

This shows that learners did not always use AI passively. Instead, some participants used feedback selectively to identify errors, understand them, and revise their own work.

Hala, a postgraduate trainee teacher, also emphasized the flexibility of AI feedback:

> The answers are clear, and I can ask it to simplify them. It helps me explain lessons and find different teaching methods. If something is difficult, I ask it to make it simpler.

These accounts suggest that personalized feedback improved perceived ease of use by reducing ambiguity, supporting error correction, and helping learners adapt explanations to their own learning needs.

4.2.3 AI tools as psychologically safe and flexible learning environments

A third theme was the perception of AI tools as low-pressure and non-judgmental learning environments. Several participants explained that AI made them feel more comfortable asking questions, especially when compared with classroom settings where they might feel embarrassed or judged.

Ahmad described this contrast clearly:

> In class, sometimes you feel afraid to ask questions. You think the teacher or other students might judge you. But with AI, I can ask anything freely. It answers politely and respectfully. I feel comfortable, and I can learn without pressure or fear of making mistakes.

Similarly, Hala emphasized the value of being able to repeat questions without embarrassment:

> I can ask the same question many times without feeling embarrassed. There is no pressure, and no one is judging me. This makes it easier to understand and learn at my own pace.

Participants also highlighted flexibility as an important advantage. AI allowed them to control the pace, depth, and direction of learning. As Noha explained:

> With AI, learning depends on you. If you want to go deeper, you can keep asking and learning more. It's more flexible than the classroom.

These findings indicate that AI tools supported learning not only cognitively, but also affectively. By reducing anxiety and allowing learners to work at their own pace, AI created a learning environment that encouraged experimentation, repeated questioning, and self-directed practice.

4.2.4 Learner agency and the need for human guidance

A fourth theme concerned learners' awareness that effective AI use requires active decision-making rather than passive dependence on AI-generated responses. Participants valued AI because it allowed them to ask, revise, simplify, and extend explanations according to their own needs. However, they also recognized that AI could not fully replace human interaction, teacher explanation, or classroom experience.

Noha's comment reflects this sense of learner control:

> With AI, learning depends on you. If you want to go deeper, you can keep asking and learning more. It's more flexible than the classroom.

At the same time, participants were aware of the limits of AI-supported learning. Eman preferred face-to-face learning because it allowed "direct interaction" and the "exchange of experiences." Similarly, Ahmad valued AI as a useful interactive tool but also expressed concern about the lack of authentic materials and the possibility that inaccurate responses could affect learning if accepted uncritically.

These reflections suggest that students viewed AI as a flexible and useful support tool, but not as a complete substitute for human guidance or formal instruction. Learners benefited most when they remained active in directing the interaction, evaluating responses, and connecting AI-supported explanations to their learning goals.

5 Discussion

This study examined EFL university learners' intention to use generative AI by incorporating interactive AI features and personalized learning feedback into TAM. All hypothesized relationships were supported. The qualitative findings explained these relationships by showing how learners experienced AI interactivity and feedback, while also qualifying the positive

quantitative results through concerns about accuracy and continued reliance on teacher guidance.

Consistent with TAM, perceived usefulness and perceived ease of use significantly predicted behavioral intention (Al-Emran et al., 2018; Alshammari et al., 2025; Alshammari and Alshammari, 2024; Venkatesh and Davis, 2000). The interviews showed that usefulness was associated with clarification, repeated practice, immediate assistance, and revision support, whereas ease of use extended beyond interface simplicity. Learners considered AI manageable because they could request simpler explanations, repeat questions, and obtain support without embarrassment or time pressure. These findings help explain why reduced effort, accessibility, and motivation may strengthen AI adoption (Hu and Gong, 2025; Liu et al., 2025; Qin et al., 2026).

Interactive AI features enhanced perceived usefulness and indirectly strengthened behavioral intention through usefulness. Although interaction is central to language development (Chapelle, 2001; Long, 1996), the qualitative findings showed more specifically why AI-mediated interaction was valued. Learners could ask follow-up questions, seek clarification, repeat explanations, and control the pace of the exchange. Interactivity therefore became useful when it supported sustained dialogue and learner-directed practice, consistent with evidence concerning responsiveness, personalization, and adaptability in AI-supported learning (Lyu et al., 2026; Wei, 2023). Participants' descriptions of AI as a "private tutor" further explained the indirect effect, although they distinguished its availability and responsiveness from the contextual judgment of human teachers.

Personalized learning feedback enhanced perceived ease of use and indirectly influenced behavioral intention through ease of use. The interviews showed that tailored feedback reduced uncertainty by identifying errors, simplifying explanations, and indicating how learners could revise their work. Personalized feedback therefore functioned not only as an instructional resource but also as a form of learning support that made language tasks easier to manage. This interpretation is consistent with evidence that personalized and targeted feedback supports engagement and learning outcomes (Ba et al., 2025; Xu et al., 2023; Yaseen et al., 2025), language development (Fincham and Alvarez, 2024), writing accuracy and engagement (Zhang and Hashemifardnia, 2026), and cognitive, behavioral, and affective engagement (Ma et al., 2026). The qualitative findings further indicated that feedback encouraged acceptance when it was understandable, relevant, and actionable, rather than merely immediate.

The interviews also expanded the quantitative findings by showing that learners used AI iteratively and selectively. They reformulated prompts, requested clarification, and evaluated which suggestions to apply. These practices reflect the negotiation of technological affordances described by Liu et al. (2025) and the prompt formulation and critical evaluation associated with AI literacy (Hwang et al., 2023). Because AI literacy and learner agency were not directly measured, however, they should not be interpreted as additional predictors of behavioral intention. Rather, these accounts help explain how learners actively shaped their perceptions of usefulness and ease of use.

Importantly, the qualitative evidence also challenged an entirely positive interpretation of the structural results. Learners valued AI's flexibility, immediacy, and psychological safety, but raised concerns about inaccurate or unclear responses and did not regard AI as a substitute for teachers. Their intention to continue using AI was therefore conditional on verification, teacher guidance, and human judgment. This supports the view that AI adoption is shaped not only by technological characteristics but also by learner participation, pedagogical support, and institutional context (Kahn et al., 2025). It also shows that positive acceptance can coexist with critical awareness, consistent with calls for critical evaluation and continued human guidance in AI-supported learning (Jin et al., 2025; Nguyen et al., 2023).

Overall, the study advances TAM by identifying the pedagogical experiences through which its central beliefs develop in EFL learning. Interactive AI features strengthened perceived usefulness by enabling dialogue, clarification, and repeated practice, whereas personalized feedback strengthened perceived ease of use by reducing ambiguity and guiding revision. The mixed-methods findings therefore move beyond confirming the TAM relationships by explaining their underlying processes and showing that the value of AI affordances depends on output quality, active learner engagement, and teacher support.

6 Implications

6.1 Theoretical implications

This study contributes to technology-acceptance research by developing a pedagogically grounded extension of TAM for generative AI use in EFL higher education. Rather than treating perceived usefulness and perceived ease of use as general evaluations of technology, the model identifies the learning-related affordances through which these perceptions may develop. Its explanation of 72% of the variance in behavioral intention indicates that incorporating pedagogically relevant features can enhance the explanatory power of TAM in language-learning contexts.

The study also distinguishes between two theoretically different affordance pathways. Interactive AI features primarily contributed to learners' judgments of educational value, whereas personalized learning feedback primarily reduced the perceived effort and uncertainty associated with learning tasks. This distinction suggests that AI affordances should not be treated as interchangeable system characteristics, because different features may shape different acceptance mechanisms.

Finally, the mixed-methods findings refine the interpretation of acceptance by showing that positive intention can coexist with selective use, concerns about accuracy, and continued reliance on teacher guidance. Although learner agency was not modeled as a separate construct, the qualitative evidence indicates that acceptance involves active negotiation of AI outputs rather than passive exposure. The study therefore offers a focused extension of TAM that connects technological acceptance with learners' pedagogical experiences while recognizing the boundaries of AI-supported learning.

6.2 Practical implications

The findings suggest that AI tools for EFL learning should support responsive interaction and clear, individualized

feedback. Developers should prioritize follow-up dialogue, adjustable explanations, error-specific guidance, and options that allow learners to request simpler or more detailed responses. Clear interfaces, prompt templates, and guided interaction features may be particularly helpful for learners with limited prior experience using generative AI.

For teachers, AI-generated feedback can extend learning support beyond class time, particularly in large classes where providing individualized feedback may be difficult. However, such feedback should supplement rather than replace teacher judgment. Learners should be encouraged to compare AI-generated responses with course materials, apply suggestions selectively, and seek clarification when outputs are inaccurate, unclear, or inconsistent with instructional objectives.

Institutions should provide introductory AI-literacy training covering prompt formulation, verification of generated content, academic integrity, privacy, and responsible use. Clear institutional policies are also needed to distinguish acceptable AI-assisted learning from inappropriate dependence or academic misconduct. These measures can support critical and responsible AI use while preserving the teacher's central role in explanation, assessment, and pedagogical decision-making.

7 Limitations and future research

Despite its contributions, this study has several limitations. First, the use of non-probability sampling and data collection from only two universities may limit the generalizability of the findings to other EFL higher education contexts. In addition, because university affiliation was not recorded as a separate questionnaire item, the distribution of participants across the two institutions could not be determined, and possible differences associated with university type could not be examined. Second, the reliance on self-reported data may have introduced response bias and may not fully reflect learners' actual use of AI tools. Future studies should therefore combine self-report measures with behavioral measures, usage records, classroom observations, or language-learning performance data.

Third, although the model included the core TAM variables and two pedagogically oriented constructs, it did not examine other potentially relevant factors, including AI literacy, language proficiency, self-regulation, feedback literacy, digital competence, and individual differences. It also did not assess the effects of prior AI experience, formal AI training, university type, academic discipline, or educational level. Because most participants had previously used AI tools and many described themselves as self-taught, future research could examine these variables as controls or moderators through multi-group analysis or measurement-invariance testing.

Fourth, the cross-sectional design captured learners' perceptions at a single point in time and could not determine how acceptance changes with continued use. Longitudinal studies are needed to examine changes in learners' perceptions, trust, strategies, and actual use over time. Experimental and mixed-methods research could also investigate whether interactive AI features and personalized feedback improve actual language-learning outcomes rather than behavioral intention alone.

Future research could further extend the model by examining AI literacy, self-regulation, digital competence, feedback literacy, and teacher guidance alongside the pedagogical affordances investigated in this study. Including the perspectives of teachers, administrators, and other institutional stakeholders would also provide a more comprehensive account of AI adoption. Finally, studies conducted across different cultural, institutional, and linguistic contexts could clarify how local educational conditions shape the acceptance and effective use of generative AI in EFL higher education.

8 Conclusion

This study examined EFL university learners' intention to use generative AI by extending TAM with interactive AI features and personalized learning feedback. Perceived usefulness and perceived ease of use significantly predicted behavioral intention, while interactive AI features strengthened perceived usefulness and personalized feedback enhanced perceived ease of use. The qualitative findings explained these relationships by showing that learners valued AI for clarification, repeated practice, immediate feedback, flexibility, and reduced anxiety, while also expressing concerns about inaccurate outputs and emphasizing the continued importance of teacher explanation and judgment. Learners therefore viewed AI primarily as a supplementary resource rather than a replacement for human instruction. Overall, the study contributes evidence from an underrepresented Egyptian and Arab EFL higher education context and shows that learners' acceptance of generative AI is shaped not only by general perceptions of usefulness and ease of use, but also by the pedagogical features through which these perceptions develop.

Data availability statement

The raw data supporting the conclusions of this article will be made available by the authors, without undue reservation.

Ethics statement

The study was conducted in accordance with applicable ethical guidelines for educational research. Participation was entirely voluntary, and informed consent was obtained from all participants prior to data collection. Participants were assured of the confidentiality and anonymity of their responses, and all collected data were used exclusively for research purposes.

Author contributions

SA: Conceptualization, Data curation, Formal analysis, Methodology, Project administration, Software, Supervision, Validation, Visualization, Writing – original draft. YA: Formal analysis, Investigation, Methodology, Project administration, Supervision, Writing – review & editing.

Funding

The author(s) declared that financial support was not received for this work and/or its publication.

Conflict of interest

The author(s) declared that this work was conducted in the absence of any commercial or financial relationships that could be construed as a potential conflict of interest.

Generative AI statement

The author(s) declared that generative AI was not used in the creation of this manuscript.

Any alternative text (alt text) provided alongside figures in this article has been generated by Frontiers with the support of artificial intelligence and reasonable efforts have been made to ensure accuracy, including review by the authors wherever possible. If you identify any issues, please contact us.

Publisher's note

All claims expressed in this article are solely those of the authors and do not necessarily represent those of their affiliated organizations, or those of the publisher, the editors and the reviewers. Any product that may be evaluated in this article, or claim that may be made by its manufacturer, is not guaranteed or endorsed by the publisher.

Supplementary material

The Supplementary Material for this article can be found online at: https://www.frontiersin.org/articles/10.3389/feduc.2026.1923377/full#supplementary-material

References

Abdelaty, Y., Alghamdi, E., and Alamer, A. (2025). The effects of self-regulation on L2 writing achievement: examining the mediating roles of feedback quality and task complexity. *System* 132, 103715. doi: 10.1016/j.system.2025.103715

Adiguzel, T., Kaya, M. H., and Cansu, F. K. (2023). Revolutionizing education with AI: exploring the transformative potential of ChatGPT. *Contemp. Educ. Technol.* 15 (3) ep429, doi: 10.30935/cedtech/13152

Al-Emran, M., Mezhuyev, V., and Kamaludin, A. (2018). Technology acceptance model in M-learning context: a systematic review. *Comput. Educ.* 125, 389–412. doi: 10.1016/j.compedu.2018.06.008

Al-Zahrani, A. M., and Alasmari, T. M. (2025). A comprehensive analysis of AI adoption, implementation strategies, and challenges in higher education across the Middle East and north Africa (MENA) region. *Educ. Inf. Technol.* 30 (8), 11339–11389. doi: 10.1007/s10639-024-13300-y

Almusharraf, A., and Bailey, D. (2025). Predicting attitude, use, and future intentions with translation websites through the TAM framework: a multicultural study among Saudi and south Korean language learners. *Comput. Assist. Lang. Learn.* 38 (5–6), 1249–1276. doi: 10.1080/09588221.2023.2275141

Alshammari, S. H., and Alshammari, M. H. (2024). Modelling the effects of emotional engagement and peer interaction on the continuous intention to use asynchronous e-learning. *PeerJ Computer Science* 10, e1990. doi: 10.7717/peerj-cs.1990

Alshammari, S. H., Almankory, A. Z., and Alrashidi, M. E. (2025). The effects of awareness and trust on students' willingness to use ChatGPT: an integrated TAM-ECM model. *RIED Rev. Iberoam. Educ. Dist.* 28, 43476. doi: 10.5944/ried.28.2.43476

Awang, P. (2015). *SEM Made Simple: A Gentle Approach to Learning Structural Equation Modeling*. Bangi: MPWS Rich Publication.

Ba, S., Yang, L., Yan, Z., Looi, C. K., and Gašević, D. (2025). Unraveling the mechanisms and effectiveness of AI-assisted feedback in education: a systematic literature review. *Comput. Educ. Open* 9, 100284. doi: 10.1016/j.caeo.2025.100284

Bagozzi, R. P. (2007). The legacy of the technology acceptance model and a proposal for a paradigm shift. *J. Assoc. Inf. Syst.* 8 (4), 244–254. doi: 10.17705/1jais.00122

Börekci, C., and Çelik, Ö (2024). Exploring the role of digital literacy in university students' engagement with AI through the technology acceptance model. *Sakarya Univ. J. Educ.* 14 (Special Issue-AI in Education), 228–249. doi: 10.19126/suje.1468866

Braun, V., and Clarke, V. (2021). *Thematic Analysis: A Practical Guide*. Los Angeles, CA: SAGE Publications.

Cabero-Almenara, J., Palacios-Rodríguez, A., Rojas Guzmán, HDLÁ, and Fernández-Scagliusi, V. (2025). Prediction of the use of generative artificial intelligence through ChatGPT among costa rican university students: a PLS model based on UTAUT2. *Appl. Sci.* 15 (6), 3363. doi: 10.3390/app15063363

Chapelle, C. A. (2001). *Computer Applications in Second Language Acquisition*. Cambridge: Cambridge University Press. doi: 10.1017/CBO9781139524681

Chen, L., Chen, P., and Lin, Z. (2020). Artificial intelligence in education: a review. *IEEE. Access.* 8, 75264–75278. doi: 10.1109/ACCESS.2020.2988510

Cohen, J. (1988). *Statistical Power Analysis for the Behavioral Sciences*. 2nd Edn. Hillsdale, NJ: Lawrence Erlbaum Associates.

Creswell, J. W., and Plano Clark, V. L. (2011). *Designing and Conducting Mixed Methods Research*. 2nd Edn. Los Angeles, CA: SAGE Publications.

Davis, F. D. (1989). Perceived usefulness, perceived ease of use, and user acceptance of information technology. *MIS. Q.* 13 (3), 319–340. doi: 10.2307/249008

De la Vall, R. R. F., and Araya, F. G. (2023). Exploring the benefits and challenges of AI-language learning tools. *Int. J. Soc. Sci. Human. Invent.* 10 (01), 7569–7576. doi: 10.18535/ijsshi/v10i01.02

Du, J., and Alm, A. (2024). The impact of ChatGPT on English for academic purposes (EAP) students' language learning experience: a self-determination theory perspective. *Educ. Sci.* 14 (7), 726. doi: 10.3390/educsci14070726

Eldakar, M. A. M., Shehata, A. M. K., and Ammar, A. S. A. (2025). What motivates academics in Egypt toward generative AI tools? An integrated model of TAM, SCT, UTAUT2, perceived ethics, and academic integrity. *Inf. Dev.* 41 (3), 747–765. doi: 10.1177/02666669251314859

ElEbyary, K., and Shabara, R. (2024). ChatGPT-generated corrective feedback: does it do what it says on the tin? *Teach. English Technol.* 24 (3), 68–89. doi: 10.56297/vaca6841//BFFO7057/MYEH4562

Elmotri, B., Harizi, R., Boujlida, A., Elyasa, Y. M., Garrouri, S., Amri, F., et al. (2025). The impact of AI-generated feedback explicitness (generic vs. specific) on EFL students' use of automated written corrective feedback. *Arab World Engl. J.* 16 (1), 384–402. doi: 10.24093/awej/vol16no1.24

Etikan, I., Musa, S. A., and Alkassim, R. S. (2016). Comparison of convenience sampling and purposive sampling. *Am. J. Theor. Appl. Stat.* 5 (1), 1–4. doi: 10.11648/j.ajtas.20160501.1

Fajt, B., and Schiller, E. (2025). ChatGPT in academia: university students' attitudes towards the use of ChatGPT and plagiarism. *J. Acad. Ethics* 23 (3), 1363–1382. doi: 10.1007/s10805-025-09603-5

Fathi, J., Rahimi, M., and Derakhshan, A. (2024). Improving EFL learners' speaking skills and willingness to communicate via artificial intelligence-mediated interactions. *System* 121, 103254. doi: 10.1016/j.system.2024.103254

Fincham, N. X., and Alvarez, A. A. (2024). "Using large language models (LLMs) to facilitate l2 proficiency development through personalized feedback and scaffolding: an empirical study," in *Proceedings of the International CALL Research Conference*, 2024, 59–64. doi: 10.29140/9780648184485-09

García-Alonso, E. M., León-Mejía, A. C., Sánchez-Cabrero, R., and Guzmán-Ordaz, R. (2024). Training and technology acceptance of ChatGPT in university students of social sciences: a netcoincidental analysis. *Behav. Sci.* 14 (7), 612. doi: 10.3390/bs14070612

Ghaly, A. (2026). Governing the intelligent university: an empirical analysis of artificial intelligence (AI) integration challenges in smart city knowledge systems. *Appl. Expert Syst. Knowl. Manag.* 1, 32–50. doi: 10.59543/x898q020

Godwin-Jones, R. (2023). Emerging spaces for language learning: aI bots, ambient intelligence, and the metaverse. *Lang. Learn. Technol.* 27 (2), 6–27. doi: 10.64152/10125/73501

Gokturk-Saglam, A. L. (2026). Generative AI in Norwegian English classrooms: exploring teacher adoption through UTAUT. *Educ. Sci.* 16 (3), 391. doi: 10.3390/educsci16030391

Hair, J. F., Risher, J. J., Sarstedt, M., and Ringle, C. M. (2019). When to use and how to report the results of PLS-SEM. *Eur. Bus. Rev.* 31 (1), 2–24. doi: 10.1108/EBR-11-2018-0203

Hattie, J., and Timperley, H. (2007). The power of feedback. *Rev. Educ. Res.* 77 (1), 81–112. doi: 10.3102/003465430298487

Hessel, G. (2019). The role of international student interactions in English as a lingua franca in L2 acquisition, L2 motivational development and intercultural learning during study abroad. *Stud. Second Lang. Learn. Teach.* 9 (3), 495–517. doi: 10.14746/ssllt.2019.9.3.4

Hu, X., and Gong, W. (2025). Modeling Chinese EFL learners' intention to use generative AI for L2 writing through an integrated model of the TAM and TTF. *Educ. Inf. Technol.* 30 (13), 18157–18179. doi: 10.1007/s10639-025-13505-9

Huang, S. (2025). Chinese EFL students' perceptions about the role of artificial intelligence (AI) technologies in their second language (L2) self-concept. *Acta Psychol. (Amst)* 258, 105211. doi: 10.1016/j.actpsy.2025.105211

Hwang, G. J., Xie, H., Wah, B. W., and Gašević, D. (2020). Vision, challenges, roles and research issues of artificial intelligence in education. *Comput. Educ. Artif. Intell.* 1, 100001. doi: 10.1016/j.caeai.2020.100001

Hwang, Y., Lee, J. H., and Shin, D. (2023). What is prompt literacy? An exploratory study of language learners' development of new literacy skill using generative AI. arXiv preprint arXiv:2311.05373. doi: 10.48550/arXiv.2311.05373

Jeong, H. (2021). "Global English in the workplace: introducing the concepts of 'workplace English as a lingua franca' (WELF), and 'successful WELF users'," in *Engaging with Work in English Studies: An Issue-Based Approach*, eds. A. Henry, and Å. Persson (Cham: Palgrave Macmillan), 197–220.

Jin, Y., Yan, L., Echeverria, V., Gašević, D., and Martinez-Maldonado, R. (2025). Generative AI in higher education: a global perspective of institutional adoption policies and guidelines. *Comput. Educ. Artif. Intell.* 8, 100348. doi: 10.1016/j.caeai.2024.100348

Kahn, P., Carrigan, M., Smith, P., Murtagh, L., Liu, R., and Song, F. (2025). Teacher agency and generative artificial intelligence: teaching in higher education as a responsive, cultural activity. *Learn. Media Technol.* doi: 10.1080/17439884.2025.2575993

Kazykhankyzy, L., Khalmatova, Z., Seitova, M., Kılıç, E., and Çelik, H. E. (2026). An extended technology acceptance model to explain higher education students' behavioral intention to use ChatGPT: the case of Kazakhstan. *Eur. J. Educ.* 61 (3), e70746. doi: 10.1111/ejed.70746

Kim, T. W. (2023). Application of artificial intelligence chatbots, including ChatGPT, in education, scholarly work, programming, and content generation and its prospects: a narrative review. *J. Educ. Eval. Health. Prof.* 20, 38. doi: 10.3352/jeehp.2023.20.38

Knoth, N., Tolzin, A., Janson, A., and Leimeister, J. M. (2024). AI literacy and its implications for prompt engineering strategies. *Comput. Educ. Artif. Intell.* 6, 100225. doi: 10.1016/j.caeai.2024.100225

Kohnke, L., and Zou, D. (2025). Artificial intelligence integration in TESOL teacher education: promoting a critical lens guided by TPACK and SAMR. *TESOL Q.* 59, S267–S278. doi: 10.1002/tesq.3396

Law, L. (2024). Application of generative artificial intelligence (GenAI) in language teaching and learning: a scoping literature review. *Comput. Educ. Open* 6, 100174. doi: 10.1016/j.caeo.2024.100174

Liu, G. L., Darvin, R., and Ma, C. (2025). Exploring AI-mediated informal digital learning of English (AI-IDLE): a mixed-method investigation of Chinese EFL learners' AI adoption and experiences. *Comput. Assist. Lang. Learn.* 38 (7), 1632–1660. doi: 10.1080/09588221.2024.2310288

Long, M. H. (1996). "The role of the linguistic environment in second language acquisition," in *Handbook of Second Language Acquisition*, eds. W. C. Ritchie, and T. K. Bhatia (Academic Press), 413–468. doi: 10.1016/B978-0-12-589042-7.50015-3

Lyu, C., Tang, S., and Li, S. (2026). AI interactivity and human-technology engagement: psychological mechanisms underlying learners' intention to use AI tools in language learning contexts. *BMC. Psychol.* 14, 432. doi: 10.1186/s40359-026-04229-7

Ma, X., Zhang, C., and Lee, I. (2026). L2 learners' engagement with AI-generated feedback on writing. *Assess. Writ.* 68, 101020. doi: 10.1016/j.asw.2026.101020

Maier, U., and Klotz, C. (2022). Personalized feedback in digital learning environments: classification framework and literature review. *Comput. Educ. Artif. Intell.* 3, 100080. doi: 10.1016/j.caeai.2022.100080

Martín-García, A. V., Redolat, R., and Pinazo-Hernandis, S. (2022). Factors influencing intention to technological use in older adults. The TAM model aplication. *Res. Aging* 44 (7–8), 573–588. doi: 10.1177/01640275211063797

Mekheimer, M. (2026). Adoption and perceptions of ChatGPT in an EFL classroom: a mixed-methods study at an Egyptian university. *Discov. Educ.* 5 (1), 6. doi: 10.1007/s44217-025-00992-8

Meniado, J. C., Huyen, D. T. T., Panyadilokpong, N., and Lertkomolwit, P. (2024). Using ChatGPT for second language writing: experiences and perceptions of EFL learners in Thailand and Vietnam. *Comput. Educ. Artif. Intell.* 7, 100313. doi: 10.1016/j.caeai.2024.100313

Mizumoto, A., and Eguchi, M. (2023). Exploring the potential of using an AI language model for automated essay scoring. *Res. Methods Appl. Linguist.* 2 (2), 100050. doi: 10.1016/j.rmal.2023.100050

Mohamed, M. G., Goktas, P., Khalaf, S. A., Kucukkaya, A., Al-Faouri, I., Seleem, E. A. E. S., et al. (2025). Generative artificial intelligence acceptance, anxiety, and behavioral intention in the Middle East: a TAM-based structural equation modelling approach. *BMC. Nurs.* 24 (1), 703. doi: 10.1186/s12912-025-03436-8

Ng, D. T. K., Lee, M., Tan, R. J. Y., Hu, X., Downie, J. S., and Chu, S. K. W. (2023). A review of AI teaching and learning from 2000 to 2020. *Educ. Inf. Technol.* 28 (7), 8445–8501. doi: 10.1007/s10639-022-11491-w

Nguyen, A., Ngo, H. N., Hong, Y., Dang, B., and Nguyen, B.-P. T. (2023). Ethical principles for artificial intelligence in education. *Educ. Inf. Technol.* 28, 4221–4241. doi: 10.1007/s10639-022-11316-w

Peng, J.-E., and Liang, W. (2026). Willingness to communicate with artificial intelligence (AI)? insights from tracking EFL learners' perceived acceptance and chat output. *Comput. Assist. Lang. Learn.* 39 (5–6), 1684–1712. doi: 10.1080/09588221.2025.2486147

Podsakoff, P. M., MacKenzie, S. B., Lee, J. Y., and Podsakoff, N. P. (2003). Common method biases in behavioral research: a critical review of the literature and recommended remedies. *J. Appl. Psychol.* 88 (5), 879–903. doi: 10.1037/0021-9010.88.5.879

Qin, F., Liu, B., Li, W., Li, H., and Li, J. (2026). The mediating role of motivation between generative artificial intelligence and foreign language proficiency: a technology acceptance model perspective. *Sage. Open.* 16 (1), 21582440261430425. doi: 10.1177/21582440261430425

Rahman, M. M., and Watanobe, Y. (2023). ChatGPT for education and research: opportunities, threats, and strategies. *Appl. Sci.* 13 (9), 5783. doi: 10.3390/app13095783

Razzouki, M., Hammou, S. B., and Izenzal, M. (2025). The adoption and effective use of artificial intelligence in Moroccan higher education: the moderating role of trust. *Cogent Educ.* 12 (1), 2553829. doi: 10.1080/2331186X.2025.2553829

Romero-Rodríguez, J. M., Ramírez-Montoya, M. S., Buenestado-Fernández, M., and Lara-Lara, F. (2023). Use of ChatGPT at university as a tool for complex thinking: students' perceived usefulness. *J. New Approaches Educ. Res.* 12 (2), 323–339. doi: 10.7821/naer.2023.7.1458

Sajja, R., Sermet, Y., Cikmaz, M., Cwiertny, D., and Demir, I. (2024). Artificial intelligence-enabled intelligent assistant for personalized and adaptive learning in higher education. *Information* 15 (10), 596. doi: 10.3390/info15100596

Shabara, R., ElEbyary, K., and Boraie, D. (2024). Teachers or ChatGPT: the issue of accuracy and consistency in L2 assessment. *Teach. English Technol.* 24(2), 71–92. doi: 10.56297/vaca6841/LRDX3699/XSEZ5215

Shute, V. J. (2008). Focus on formative feedback. *Rev. Educ. Res.* 78 (1), 153–189. doi: 10.3102/0034654307313795

Song, C., and Song, Y. (2023). Enhancing academic writing skills and motivation: assessing the efficacy of ChatGPT in AI-assisted language learning for EFL students. *Front. Psychol.* 14, 1260843. doi: 10.3389/fpsyg.2023.1260843

Strzelecki, A., and ElArabawy, S. (2024). Investigation of the moderation effect of gender and study level on the acceptance and use of generative AI by higher education students: comparative evidence from Poland and Egypt. *Br. J. Educ. Technol.* 55 (3), 1209–1230. doi: 10.1111/bjet.13425

Sun, P. P., and Mei, B. (2022). Modeling preservice Chinese-as-a-second/foreign-language teachers' adoption of educational technology: a technology acceptance perspective. *Comput. Assist. Lang. Learn.* 35 (4), 816–839. doi: 10.1080/09588221.2020.1750430

Sun, Y., Li, L., Zhang, X., Chen, X., Deng, S., and Hu, X. (2026). AI literacy and psychosocial factors shaping Chinese university students' attitudes and behavioral intentions toward generative AI use. *BMC. Psychol.* 14, 236. doi: 10.1186/s40359-026-03989-6

Teng, M. F. (2024). "ChatGPT is the companion, not enemies": EFL learners' perceptions and experiences in using ChatGPT for feedback in writing. *Comput. Educ. Artif. Intell.* 7, 100270. doi: 10.1016/j.caeai.2024.100270

Teo, T. (2011). Factors influencing teachers' intention to use technology: model development and test. *Comput. Educ.* 57 (4), 2432–2440. doi: 10.1016/j.compedu.2011.06.008

Ursavaş, ÖF, Yalçın, Y., İslamoğlu, H., Bakır-Yalçın, E., and Cukurova, M. (2025). Rethinking the importance of social norms in generative AI adoption: investigating the acceptance and use of generative AI among higher education students. *Int. J. Educ. Technol. High. Educ.* 22 (1), 38. doi: 10.1186/s41239-025-00535-z

Venkatesh, V., and Davis, F. D. (2000). A theoretical extension of the technology acceptance model: four longitudinal field studies. *Manage. Sci.* 46 (2), 186–204. doi: 10.1287/mnsc.46.2.186.11926

Venkatesh, V., Morris, M. G., Davis, G. B., and Davis, F. D. (2003). User acceptance of information technology: toward A unified View1. *MIS. Q.* 27 (3), 425–478. doi: 10.2307/30036540

Wang, D., Shan, D., Ju, R., Kao, B., Zhang, C., and Chen, G. (2025). Investigating dialogic interaction in K12 online one-on-one mathematics tutoring using AI and sequence mining techniques. *Educ. Inf. Technol.* 30 (7), 9215–9240. doi: 10.1007/s10639-024-13195-9.

Wang, H., and Lehman, J. D. (2021). Using achievement goal-based personalized motivational feedback to enhance online learning. *Educ. Technol. Res. Dev.* 69 (2), 553–581. doi: 10.1007/s11423-021-09940-3

Wang, Y., and Yu, R. (2026). Exploring the factors on the acceptance of generative artificial intelligence teaching assistants: the perspective of technology acceptance model. *Int. J. Hum. Comput. Interact.* 42 (2), 794–808. doi: 10.1080/10447318.2025.2513581

Wei, L. (2023). Artificial intelligence in language instruction: impact on English learning achievement, L2 motivation, and self-regulated learning. *Front. Psychol.* 14, 1261955. doi: 10.3389/fpsyg.2023.1261955

Wu, X. Y., and Chiu, T. K. (2025). Integrating learner characteristics and generative AI affordances to enhance self-regulated learning: a configurational analysis. *J. New Approaches Educ. Res.* 14 (1), 10. doi: 10.1007/s44322-025-00028-x

Xiao, Y. (2025). The impact of AI-driven speech recognition on EFL listening comprehension, flow experience, and anxiety: a randomized controlled trial. *Humanit. Soc. Sci. Commun.* 12 (1), 1–14. doi: 10.1057/s41599-025-04672-8

Xu, X., Dugdale, D. M., Wei, X., and Mi, W. (2023). Leveraging artificial intelligence to predict young learner online learning engagement. *Am. J. Dist. Educ.* 37 (3), 185–198. doi: 10.1080/08923647.2022.2044663

Yakubu, M. N., David, N., and Abubakar, N. H. (2025). Students' behavioural intention to use content generative AI for learning and research: a UTAUT theoretical perspective. *Educ. Inf. Technol.* 30 (13), 17969–17994. doi: 10.1007/s10639-025-13441-8

Yancey, K. P., Laflair, G., Verardi, A., and Burstein, J. (2023). "Rating short L2 essays on the CEFR scale with GPT-4," in *Proceedings of the 18th Workshop on Innovative Use of NLP for Building Educational Applications (BEA 2023)*, eds. E. Kochmar, J. Burstein, A. Horbach, R. Laarmann-Quante, N. Madnani, A. Tack, et al. (Toronto: Association for Computational Linguistics), 576–584. doi: 10.18653/v1/2023.bea-1.49

Yaseen, H., Mohammad, A. S., Ashal, N., Abusaimeh, H., Ali, A., and Sharabati, A. A. A. (2025). The impact of adaptive learning technologies, personalized feedback, and interactive AI tools on student engagement: the moderating role of digital literacy. *Sustainability* 17 (3), 1133. doi: 10.3390/su17031133

Yolcu, H. H. (2023). Redefining the teacher's role in education through artificial general intelligence (AGI). *Center Open Sci.* 4 (11), 1–09. doi: 10.31219/osf.io/b83ps00.70

Zhang, Y., and Hashemifardnia, A. (2026). Real-time AI-mediated peer feedback in L2 writing: a mixed-methods study of learner engagement and accuracy development. *Comput. Assist. Lang. Learn.* 1–28. doi: 10.1080/09588221.2026.2613722

Zhao, Z., An, Q., and Liu, J. (2025). Exploring AI tool adoption in higher education: evidence from a PLS-SEM model integrating multimodal literacy, self-efficacy, and university support. *Front. Psychol.* 16, 1619391. doi: 10.3389/fpsyg.2025.1619391

Zou, M., and Huang, L. (2023). To use or not to use? Understanding doctoral students' acceptance of ChatGPT in writing through technology acceptance model. *Front. Psychol.* 14, 1259531. doi: 10.3389/fpsyg.2023.1259531