Journal of Intelligent Decision Making and Information Science

www.jidmis.org
eISSN: 3079-0875

Understanding Students' Utilisation of Generative Artificial Intelligence for Educational Purposes in Higher Education: A PLS-SEM Approach

Fathi Aidarus[1,*], Jusang Lee[2]

[1] Corresponding Author, Department of Software System, College of Computing and Information Technology, University of Doha for Science and Technology, Doha, Qatar

[2] Department of Institutional Research Strategy and Development, University of Doha for Science and Technology, Doha, Qatar

ARTICLE INFO

Article history:
Received 20 July 2026
Received in revised form 30 Aug 2026
Accepted 14 Sep 2026

Keywords: Gen AI, trust, continuance intention, usefulness, satisfaction, higher education, and PLS-SEM

ABSTRACT

Generative artificial intelligence (Gen AI) is now widely used by university students, yet high use does not guarantee that students regard it as a trustworthy, integral part of their learning. This study examines the factors influencing university students' educational utilisation of Gen AI platforms. An extended Technology Acceptance Model incorporating perceived ease of use, perceived usefulness, trust, satisfaction, and continuance intention was developed and tested. Survey data from 260 students with Gen AI experience at a university in Qatar were analysed using partial least squares structural equation modelling (PLS-SEM). The findings indicate that trust significantly and positively predicts students' satisfaction with Gen AI, perceived usefulness, and educational utilisation. Perceived ease of use significantly predicts perceived usefulness but has a weak, non-significant effect on educational utilisation. Satisfaction and perceived usefulness significantly predict students' continuance intention to use Gen AI, which subsequently has a significant positive effect on educational utilisation. The model explains 65% of the variance in continuance intention and 36% of the variance in educational utilisation. These findings highlight the importance of trust, usefulness, and satisfaction in shaping students' continued and academically oriented use of Gen AI. The study contributes theoretical and practical insights into the responsible integration of Gen AI in higher education.

1. Introduction

The recent evolution of generative artificial intelligence (Gen AI) has marked a momentous shift in the ecology of higher education. Compared to previous educational technologies that mainly facilitated access to information and communication, modern Gen AI technologies, driven by large natural language models, can perform a range of tasks, such as generating text, examples, and summaries, and answering specific questions based on users' prompts. Gen AI tools, such as ChatGPT, have potential for students' learning, particularly in brainstorming and supporting writing and analysis [1]. The educational value of these platforms is questioned due to the superficial

* *Corresponding author.*
E-mail address: fathi.aidarus@udst.edu.qa

convenience and complexity of these technologies, indicating that these do not assure useful learning or quality educational experiences.

The distinction of these dimensions of the value of Gen AI in the context of learning and teaching is essential. Current scholarship in the field has suggested several educational benefits associated with large natural language models. These opportunities include instant feedback, customised assistance, and the potential to enhance both teaching and learning [2]. Gen AI platforms such as ChatGPT may increase access to real-time responses and enable customised, multifaceted learning experiences while improving the efficiency of students' tasks [3].

Contrary to these benefits, these platforms have substantial limitations. Information generated through Gen AI platforms may be erroneous or deceptive, while over-reliance on them may limit students' critical thinking, raise concerns about academic integrity and potential biases, and undermine students' competence to assess the information generated autonomously [3][2]. One of the prominent challenges of these platforms concerns academic integrity, since these technologies can produce complex academic text, making it difficult for conventional detection mechanisms to identify unauthorised support [4]. They suggested various techniques and strategies to academic staff members and educational institutions to minimise academic dishonesty associated with these platforms. Among those strategies are "developing policies and procedures, providing training and support, and using various methods to detect and prevent cheating" [4]. Other challenges include generating biased, fake, or incorrect information, bypassing plagiarism detectors, and facilitating students' willingness to cheat [5]. Therefore, the prevalent usage and adoption of these tools among the students does not necessarily imply their educational utility or value.

Recent literature on generative AI suggests diverse perceptions among students of Gen AI tools, which determine their adoption and use in educational settings. These perceptions include perceived usefulness, perceived ease of use, satisfaction, trust and behavioural intentions [6][7][8][9][10][11].

Despite numerous studies on the factors influencing the adoption of these tools among university students, little attention has been paid to them in the context of higher education in Qatar. As such, the present study examines the educational utilisation of generative artificial intelligence tools, drawing on the extended technology acceptance model. Specifically, the proposed model empirically tests determinants of educational utilisation from the perspective of four exogenous and mediating constructs.

2. Literature Review

2.1 Theoretical Background

This study draws on an extended version of the technology acceptance model (TAM), initially proposed by [16]. The model theorises that for a consumer to adopt a new technology, they should perceive it as useful and easy to use, requiring little mental effort. These two perceptions determine both the intention to adopt the technology and its actual acceptance. The model has been extensively applied and extended in various contexts such as mobile banking, smartphone adoption, social media, the internet, and recent generative artificial intelligence platforms [12][13][14][15][10][11]. The present study extends the TAM model by incorporating additional relevant variables in the

context of information technology acceptance, such as trust and satisfaction, to account for greater variance in the Gen AI educational utilisation model.

2.2 Perceived Ease of Use

Perceived ease of use (PEU) is a key construct in technology acceptance literature. It refers to the extent to which users perceive that using a given technology requires little mental effort and does not take longer to complete the task [16]. Within the context of generative artificial intelligence, this concept refers to students' perceptions of how easily they learn to operate Gen AI tools, interact with the system, and obtain desired outcomes. Within the TAM literature, systems perceived as easy to use are more likely to be regarded as useful [16][17].

The construct of PEU was examined across various technological contexts, including e-learning, digital services, social media, mobile banking and, more recently, generative artificial intelligence. For instance, PEU was found to positively predict behavioural intention to adopt an e-learning system [18], 3G technology [19][20] and smartphone adoption [12]. Furthermore, recent studies on Gen AI support the positive association between PEU and intention to adopt these platforms, looking from diverse demographics such as faculty members in a public university in Saudi Arabia [21], university students in Türkiye [6] and college students in the United States [11]. In contrast, PEU was found to have no impact on students' intention to use ChatGPT [22], indicating that they use the platform regardless of their perceptions of the system's ease of use.

In line with the original TAM propositions, users' perceived ease of use determines their perceptions of the technology's usefulness [16]. This notion was supported by numerous studies in various contexts [13][23][24][18]. Recent studies on the adoption of generative artificial intelligence suggest that perceived ease of use also significantly predicts the perceived usefulness of these platforms among both faculty and student demographics [21][6][10]. As such, the following hypotheses are posited:

H1: Perceived ease of use is positively associated with Gen AI educational utilisation.

H2: Perceived ease of use is positively associated with perceived usefulness of Gen AI.

2.3 Perceived Usefulness

Perceived usefulness (PU) is another key construct in the TAM model. It suggests that if a user perceives the system will enhance their performance [16]. Users' perception that the technology will help them complete their tasks more quickly and efficiently is more likely to drive adoption. This link has been supported by numerous studies in various technological contexts. PU was found to be positively associated with behavioural intention in mobile banking and digital financial services [13][25][26], where research on smartphone use for learning has found that perceived usefulness exerts a significant impact on learners' intention to use mobile technologies for educational purposes [13][27]. A recent study [14] has found that university professor's perceived usefulness has positively predicted their intention to adopt blended learning technology. Furthermore, perceived usefulness was a key predicting factor of users' behavioural intention to use ChatGPT [28] [22], to use Gen AI Chatbots [6] to continue using ChatGPT [7][11]. Perceived usefulness was also found to have indirect

impact on ChatGPT continuance usage among students through satisfaction [8]. In contrast, PU was found to have no impact on Gen AI acceptance among university students [21], indicating that they are using these platforms regardless of their usefulness to complete their tasks quickly and efficiently. However, this study has noted that perceptions of ease of use are more important than usefulness. Following this discussion, the following hypothesis is presented:

H3: Perceived usefulness is positively associated with continuous intention to use ChatGPT.

2.4 Satisfaction with Gen AI

Technology adoption literature embraces the concept of satisfaction as a key antecedent factor in the adoption among the consumers. This concept of satisfaction in this study is conceptualized as the overall assessment of the users that the usage of a technology fulfills their expectations as well as willingness to recommend to their social circles. If the users are satisfied with the technology, they are more likely to continue using it. This indicates that there is a positive relationship between satisfaction and continuance intention among users regarding technology. One of earliest studies on IS adoption, based on the expectation confirmatory framework, has provided support this relationship, where it has suggested that satisfaction significantly determined users' continuance intention to adopt IS systems [40]. Furthermore, recent scholarship has also provided empirical evidence for this relationship in various contexts such as e-learning systems [29][30][31][32] e-government [33], fintech adoption [15] and mobile money transfer [13].

Recently, numerous studies have reported similar empirical support for this relationship in the context of generative artificial intelligence adoption in various countries such as Saudi Arabia [22], India [7][9] Vietnam [8] and United States of America [11]. The demographic composition for these studies were university and college students, with ChatGPT being most studied Gen AI platform. Given these empirical evidence, the current study also predicts a positive relationship between students' perceived satisfaction of Gen AI with their continued intention to use Gen AI systems. Based on the above discussion, this study proposes:

H4: Satisfaction with ChatGPT is positively associated with continuous intention to use ChatGPT.

2.5 Trust in Gen AI

Today's digital environment necessitates users' evaluations of the technology in terms of accuracy, reliability or security. Therefore, the concept of trust emerges as a key antecedent for post-adoption assessments, in which users are more likely to use technology if they trust its reliability, accuracy, and information management [13][15][10]. Studies in the established literature on information systems suggest that trust contributes to a favourable evaluation of users' willingness to continue using the system. In other words, users who place greater trust in the system are more likely to continue using it. This concept plays a pivotal role in behavioural research that uses information systems theories and models [34]. Prior research on mobile money transfer and fintech has suggested that trust positively influences users' intention to continue using the system [13][15]. Similar evidence was reported in the context of e-learning systems and mobile banking applications [35].

Even though trust is generally an essential factor in the adoption and acceptance of technologies, the empirical evidence on this construct remains inconclusive, particularly in the context of generative artificial intelligence scholarship. Some studies suggest that trust determines the actual use of technology, while others report that it influences users' behavioural intentions, without necessarily translating that into actual behaviour. For instance, using a sample of the general population, [36] found that perceived trust has a significant impact on the intention to use and the actual use of ChatGPT, indicating that trust is a key driver of AI adoption. Gen AI acceptance was reported to be indirectly influenced by trust through perceived usefulness, implying that users who perceived Gen AI as useful are also more likely to develop trust in it [21]. In contrast, [37] reported that trust has no direct, significant impact on the actual use of AI; however, it has an indirect impact through behavioural intention. This notion is also supported by [8], who suggested that satisfaction with ChatGPT mediated the relationship between trust and continuance intention, implying an indirect effect. Nevertheless, some studies have reported no significant relationship between trust and AI adoption or acceptance. For instance, [6] found that trust has no impact on the use of Gen AI among students, suggesting that students may use technology regardless of perceived degree of trust [6]. Furthermore, the same notion was also reported by a recent [38]. Given these contradictory results, the present study predicts a positive relationship between trust and the use of Gen AI for academic purposes. As such, this hypothesis is tested:

H5: Trust in ChatGPT is positively associated with its educational utilisation.

Prior studies have also established that trust plays a significant role in predicting users' satisfaction in technology-mediated environments. Trust contributes positively to satisfaction, reducing the uncertainties associated with the systems. This relationship has been demonstrated across technology acceptance contexts. For instance, [15] found a positive relationship between trust and satisfaction among customers of financial technology applications. Similarly, this relationship was also empirically supported in the context of mobile banking technology [35]. Recent research on Gen AI chatbots found that perceived trust was a significant positive predictor of users' satisfaction with ChatGPT [39]. Using a sample of Vietnamese university students, [8] found that trust significantly influenced students' satisfaction with ChatGPT, indicating that the higher their trust in the system's reliability and accuracy, the higher their satisfaction. Based on the above discussion, the following hypothesis is presented:

H6: Trust in ChatGPT is positively associated with perceived usefulness of ChatGPT.

H7: Trust in ChatGPT is positively associated with satisfaction with ChatGPT.

2.6 Continuous intention to use Gen AI

Continuance intention refers to users' willingness to continue engaging with the technology after the initial exposure. Unlike initial behavioural intention, which explains the extent to which the user intends to engage with the technology, continuance intention concerns post-adoption intention, which was established through actual exposure to the technology [40]. According to the technology acceptance theories, such as TAM [16], Motivational Model [41] and Unified Theory of Acceptance and Use of Technology "ATAUT" [42], behavioural intention predicts actual usage. This relationship

was tested across various contextual technologies. For instance, [25], reported that behavioural intention positively determined the adoption of mobile banking technology. In the context of social networking sites (SNS), [13] found that continuance intention to use SNS for news consumption positively predicted actual usage of SNS for news consumption among university students. More recently, [36] distinguished between these two constructs in the context of Gen AI. They found that users' intention to use ChatGPT significantly determined their actual use of ChatGPT.

In the current study, this positive relationship is also expected and is extended to both continuance intention toward the Gen AI platform and actual use. The latter concept is referred to in this study as educational utilisation for academic purposes. Consequently, this study posits that students with a strong inclination to use these platforms are more likely to use them for academic purposes. As such, this study posits that:

H8: Continuance intention to use ChatGPT is positively associated with its utilisation for academic-related purposes.

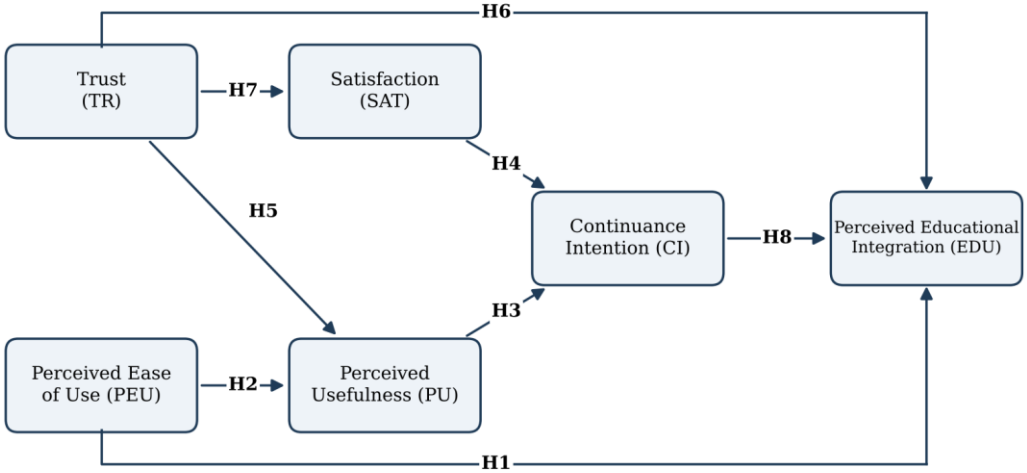

Figure 1: Research model and hypotheses

3. Research Methodology

The main objective of this study is to explain the factors that determine university students' utilisation of Gen AI platforms for educational purposes. The proposed model extends the TAM model by incorporating satisfaction and trust to account for higher variance. The main dependent construct in this study is educational utilization, which represents participants' actual use of Gen AI platforms for academic and learning-related purposes.

Using a quantitative cross-sectional design, this study employed a self-administered questionnaire to empirically test the hypothesised relationships. The target population for this study comprised of undergraduate students in a public university in Qatar. To select those participants, a simple random sampling procedure was employed. This approach was chosen to ensure maximum reach across diverse colleges. An online questionnaire was designed and shared with the participants. A key inclusion criterion was that students should have prior experience with Gen AI platforms such as ChatGPT, Gemini, Copilot, and DeepSeek, among others. Prior to answering the questions,

participants were informed about the study's purpose, confidentiality, consequences, potential benefits, and risks or discomforts, as well as their right to withdraw from the study without any consequences. Participation was voluntary, and no personal identification was collected. The collected data was analysed in aggregate and used to test the proposed theoretical model.

The items used to measure the constructs were adapted from the technology adoption literature and were adjusted to suit the generative AI context. All constructs (perceived usefulness, perceived ease of use, satisfaction, and educational utilisation) were measured using four items, except trust, which was measured using five items. All items were rated using a five-point Likert Scale of agreement.

3.1. Descriptive statistics

This section presents the descriptive statistics for the main study variables. These include trust, perceived usefulness, perceived ease of use, satisfaction, continuous intention and educational utilisation. The main objective of the study was to evaluate key determinants of educational utilisation of generative artificial intelligence tools as perceived by the students.

Table 1 presents descriptive statistics for the trust variable and consisted of five indicators. The findings indicate moderate to low level of trust in AI tools among the students. The highest mean score observed belong to "I understand how the information I put into AI will be used in the future" (M=3.72, SD=1.067), indicating that the students generally had acceptable understanding of how their information is used by the AI tools in the future. The second and third indicators showed moderate mean scores, suggesting that students somewhat understand who can access the information they enter in AI tools (TR2, M=3.09, SD=1.192) and sometimes try to change names when using AI tools to protect their confidentiality (TR3, M=3.24, SD=1.275). In contrast, the lowest mean scores were observed in TR4 (perceptions on correct information) and TR5 (overall trust in AI tools). The mean scores were 2.76 and 2.5, respectively, implying limited confidence in AI's ability to provide accurate information and low trust in these tools to handle their personal information securely. Furthermore, this construct demonstrated acceptable data normality, with skewness and kurtosis indices below the recommended thresholds. The values for skewness and kurtosis should be less than 2 and 7, respectively, so that the data can be considered normally distributed.

Table 1: Descriptive Statistics for Trust in AI

Items	Label	Mean	SD	Skewness		Kurtosis	
				Statistic	SE	Statistic	SE
I understand how the information I put into AI will be used in the future.	TR1	3.72	1.067	-.713	.150	.065	.300
I understand who can view the information I enter into AI.	TR2	3.09	1.192	-.061	.150	-.929	.300
I sometimes try to change names when using AI to protect confidentiality.	TR3	3.24	1.275	-.110	.150	-1.064	.300
I believe that AI provides correct information.	TR4	2.76	.937	-.074	.150	-.073	.300
Overall, I trust AI tools with my information.	TR5	2.50	1.117	.233	.150	-.629	.300

SD=Standard Deviations. SE= Standard Error.

The findings, presented in Table 2, showed high to moderate perceptions of usefulness of AI tools among the students. Generally, students highly agreed that these tools help them save their time, with having the highest mean score (M=4.35, SD=0.821), followed their perceived usefulness of these tools in their daily lives (M=3.82, SD=1.077). In addition, students perceived that AI tools improved their productivity (M=3.74, SD=1.129) and their creativity (M=3.23, SD=1.270). The values if skewness ranged from -1.577 to -0.310, while the kurtosis values ranged from -0.908 to 3.250, suggesting that these values are within the acceptable range.

Table 2: Descriptive Statistics for Perceived Usefulness of AI

Items	Label	Mean	SD	Skewness		Kurtosis	
				Statistic	SE	Statistic	SE
AI helps me save time.	PU1	4.35	.821	-1.577	.150	3.250	.300
AI improves my productivity.	PU2	3.74	1.129	-.851	.150	.083	.300
AI improves my creativity.	PU3	3.23	1.270	-.310	.150	-.908	.300
I find AI useful in my daily life.	PU4	3.82	1.077	-.788	.150	.109	.300

SD=Standard Deviations. SE= Standard Error.

Regarding the third variable, the results of descriptive statistics suggested generally high mean scores, which indicate that the students strongly agreed with the statements of perceived ease of use, ranging from 3.36 to 4.16. Specifically, the highest mean score observed pertains to the PEU4 (overall, AI is easy to use, M=4.16, SD=0.756). This is followed by PEU2 (M=4.12, SD=0.783), which solicits students' perceptions on the availability of easy-to-understand user interfaces. The first item (PEU3) also had a relatively high mean score (M=4.10, SD=0.883), indicating that participants largely agreed that AI is easy to learn. Contrary to this notion, participants were generally neutral to moderate in agreement that certain AI tools can be difficult to use. Taken together, the findings suggest that participants felt AI tools were easy to use. Moreover, the data showed an acceptable level of normativity, with indices of skewness and kurtosis lower than 2 and 7, respectively.

Table 3: Descriptive Statistics for Perceived Ease of Use of AI

Items	Label	Mean	SD	Skewness		Kurtosis	
				Statistic	SE	Statistic	SE
AI is easy to learn.	PEU1	4.10	.883	-1.104	.150	1.432	.300
Most AI tools have an easy-to-understand user interface.	PEU2	4.12	.783	-.893	.150	1.091	.300
Some AI tools are not easy to use.	PEU3	3.36	.863	-.296	.150	-.061	.300
Overall, AI is easy to use.	PEU4	4.16	.756	-.811	.150	.982	.300

SD=Standard Deviations. SE= Standard Error.

Satisfaction with AI tools was another construct of interest in this study. Results presented in Table 4, demonstrate a general positive level of satisfaction with these tools, with mean score ranging from 3.50 to 3.81. The recommendation of AI to friends had scored the highest mean (SAT2, M=3.81, SD=1.125), implying strong peer support. This is followed by overall satisfaction with AI (SAT4, M=3.74, SD=1.032) and recommendation to family members (SAT3, M=3.72, SD=1.159), indicating a favourable attitude towards AI tools and moderate willingness to recommend its use among close

social circles. However, the SAT 1, which stated that AI tools had met participants' expectations, received the lowest mean score (M=3.50, SD=1.027), even though it showed a generally positive assessment. The normality test results indicated an acceptable level of normality. The indices of skewness ranged from -0.555 to -1.049, while the indices for kurtosis ranged from -0.193 to .575, showing that these scores are within the range of acceptable cut-scores of 2 and 7 respectively. collectively, these findings suggest that participants were generally satisfied with AI tools.

Table 4: Descriptive Statistics for Satisfaction with AI

Items	Label	Mean	SD	Skewness		Kurtosis	
				Statistic	SE	Statistic	SE
AI has met my expectations.	SAT1	3.50	1.027	-.555	.150	-.193	.300
I would recommend AI to my friends.	SAT2	3.81	1.125	-1.049	.150	.536	.300
I would recommend AI to my family.	SAT3	3.72	1.159	-.987	.150	.306	.300
Overall, I am satisfied with AI.	SAT4	3.74	1.032	-.884	.150	.575	.300

SD=Standard Deviations. SE= Standard Error.

Continuous intention to use AI tools was another key construct examined in this study, with descriptive statistics presented in Table 5. The results showed a moderate to strong inclination toward continuing to use AI tools, with mean scores ranging from 3.15 to 4.04. The participants strongly agreed that they plan to continue using AI technologies (M=4.04, SD=0.982) and expect that their usage will increase in the future (M=3.89, SD=1.117). In addition, the participants moderately agreed that they would be disappointed if they could no longer use AI tools (M=3.49, SD=1.262), while their expectation "to decrease of discontinue their AI use" showed a lower mean score (M=3.15, SD=1.290), indicating that study sample somehow developed a dependency on AI tools. In terms of normality test, the skewness and tests showed that the data were normally distributed.

Table 5: Descriptive Statistics for Continuous Intention to Use AI

Items	Label	Mean	SD	Skewness		Kurtosis	
				Statistic	SE	Statistic	SE
I plan to continue using AI.	CI1	4.04	.982	-1.178	.150	1.293	.300
I expect to use AI more in the future.	CI2	3.89	1.117	-.926	.150	.229	.300
I would like to decrease or discontinue my use of AI.	CI3	3.15	1.290	.018	.150	-1.089	.300
I would be disappointed if I could no longer use AI tools.	CI4	3.49	1.262	-.407	.150	-.854	.300

SD=Standard Deviations. SE= Standard Error.

Finally, this perceived educational utilisation of AI tools was examined. Results, presented in Table 6, showed mixed perceptions across the four items measuring this construct, with mean scores ranging from 2.87 to 4.18. The second item "I believe AI can improve learning experiences for students" scored the highest mean (M=4.18, SD=0.951), implying a strong favorable feeling about the AI tools' benefits in the educational context. In contrast, the participants generally disagreed that using AI tools for coursework constitutes cheating (M=2.87, SD=1.205). This may indicate that the use of AI tools is perceived as an acceptable and legitimate educational source. The third (I am more comfortable asking questions to AI than to my instructors" and fourth items (I am more comfortable

asking questions to AI than to my classmates scored identical mean scores (M=3.46), with standard deviations of 1.276 and 1.291, respectively. This result may suggest that more than two-thirds of the participants are comfortable seeking assistance from AI technologies than from their instructors or classmates. Overall, the findings show that participants view AI tools as valuable educational tools that can enhance their learning experiences. Moreover, the normality test for this variable showed a satisfactory level of normality, with skewness and kurtosis values falling within the acceptable thresholds.

Table 6: Descriptive Statistics for Educational Utilisation of AI Tools

Items	Label	Mean	SD	Skewness		Kurtosis	
				Statistic	SE	Statistic	SE
I believe that using AI for coursework is a form of cheating.	EDU1	2.87	1.205	.138	.150	-.767	.300
I believe AI can improve learning experiences for students.	EDU2	4.18	.951	-1.328	.150	1.686	.300
I am more comfortable asking questions to AI than to my instructors.	EDU3	3.46	1.276	-.471	.150	-.857	.300
I am more comfortable asking questions to AI than to my classmates.	EDU4	3.46	1.291	-.426	.150	-.951	.300

SD=Standard Deviations. SE= Standard Error.

3.2. Assessment of Measurement Model

This study employs a two-stage approach to analysing the SEM, where the first stage establishes construct validity and reliability, while the second tests the hypothesised relationships in the structural model. PLS-SEM was employed to assess the indicators before evaluating the structural model.

To assess internal consistency reliability, this study reported two indices: composite reliability (CR) and Cronbach's alpha. A construct can be internally consistent if it achieves a score of at least 0.70. Results presented in Table 7 show empirical evidence, indicating that all constructs in this study obtained scores of 0.70 and higher for both CR and Cronbach's alpha. The CR values ranged from 0.83 to 0.91, indicating satisfactory internal consistency across all constructs. Continuous intention obtained the highest CR value (0.91), while educational utilisation and perceived usefulness scored the lowest, albeit identical, CR values (0.83). In contrast, the values for the Cronbach's alpha coefficient ranged from 0.70 to 0.90, indicating an acceptable to excellent internal consistency. Satisfaction had the highest reliability coefficient, whereas educational utilisation had the lowest.

Table 7: Construct Reliability and Convergent Validity

Variables	Items	Loading*	CR	Cronbach's Alpha	AVE
Continuous Intention	CI1	0.92*	0.91	0.85	0.77
	CI2	0.88*			
	CI4	0.83*			

Perceived Usefulness	PU1	0.80*	0.83	0.89	0.67
	PU2	0.87*			
	PU3	0.76*			
	PU4	0.83*			
Satisfaction	SAT1	0.79*	0.93	0.90	0.78
	SAT2	0.94*			
	SAT3	0.92*			
	SAT4	0.88*			
Perceived Ease of Use	PEU1	0.87*	0.90	0.83	0.75
	PEU2	0.86*			
	PEU4	0.87*			
Educational Utilisation	EDU2	0.75*	0.83	0.70	0.62
	EDU3	0.78*			
	EDU4	0.83*			
Trust	TR4	0.90*	0.88	0.72	0.78
	TR5	0.87*			

* significant at < .001

Average variance extracted (AVE) was employed to evaluate the convergent validity. According to the established guidelines, AVE values greater than 0.50 indicate that a construct captures sufficient variance from its indicators and therefore demonstrates adequate convergent validity. As such, AVE values for all constructs ranged from 0.62 to 0.78, providing empirical support for the convergent validity. Besides AVE, indicator loadings were evaluated as an additional measure of convergent validity, with higher loadings indicating a strong association between indicators and their respective constructs. Results in Table 7 demonstrates are all loadings across constructs were statistically significant and higher than 0.70, supporting convergent validity in this study. The values of indicator loadings ranged from 0.75 to 0.94.

Table 8: Fornell-Larcker criterion

Variables	CI	EDU	PEU	PU	SAT	TR
Continuous Intention (CI)	0.88					
Educational utilisation (EDU)	0.57	0.79				
Perceived Ease of use (PEU)	0.34	0.31	0.87			
Perceived Usefulness (PU)	0.73	0.58	0.36	0.82		
Satisfaction (SAT)	0.77	0.52	0.36	0.72	0.88	
Trust (TR)	0.50	0.43	0.27	0.53	0.65	0.88

To assess discriminant validity, two criteria were employed: the Fornell-Larcker criterion and the Heterotrait-Monotrait ratio (HTMT). For a construct to achieve adequate discriminant validity, the square root of AVE should be higher than its association with other constructs. Hence, in Table 8, the square root of AVE across constructs was higher than the relationships among the constructs, showing strong support for discriminant validity. The HTMT criterion was further employed to assess

discriminant validity. As shown in Table 9, all HTMT values (in bold on the diagonal) were below the recommended threshold of 0.85, as per guidelines established in the literature. This provides evidence of satisfactory discriminant validity among the constructs. Therefore, the measurement model produced satisfactory reliability and validity indices, allowing the researchers to proceed with the evaluation and interpretation of the structural model.

Table 9: Heterotrait-Monotrait ratio (HTMT) Criteria

Variables	CI	EDU	PEU	PU	SAT
Continuous Intention (CI)					
Educational 770tilization (EDU)	**0.72**				
Perceived Ease of use (PEU)	0.40	**0.40**			
Perceived Usefulness (PU)	0.86	0.73	**0.43**		
Satisfaction (SAT)	0.87	0.64	0.41	**0.83**	
Trust (TR)	0.64	0.60	0.35	0.69	**0.80**

3.3. Assessment of Structural Model

The structural model was assessed utilising the inner model of PLS-SEM to scrutinise numerous significant characteristics of the theorised framework. For this purpose, this assessment focused on key aspects of the model, namely, explanatory power, the strength of the associations, and the significance and contribution of the predictive constructs. Consistent with the established PLS-SEM recommendations, three indices, such as coefficient determination (R^2), effect size (f^2) and predictive relevance (Q^2) were employed in this study to evaluate the robustness of the proposed model. Consequently, these indices offer imperative insights into the model's ability to account for variance, assess the magnitude of associations among constructs, and address potential multicollinearity issues.

As shown in Figure 2, perceived ease of use and trust have managed to explain about 33% of variance perceived usefulness (R^2=.33), whereas satisfaction and perceived usefulness have accounted for 65% of the variance in continuance intention (R^2=.65). Likewise, trust, perceived ease of use and continuance intention have all explained about 36% of the variance in educational utilisation (R^2=.36%). According to [43][44], R^2 values of 0.75, 0.50, and 0.25 are considered substantial, moderate, and weak, respectively. Hence, the explanatory power of the model constructs in this study is considered moderate overall.

Predictive relevance was then assessed using Q^2 predict values obtained through the PLSpredict procedure in SmartPLS. According to established literature, values greater than zero indicate predictive relevance, meaning that the hypothesised model can precisely predict the outcome variables. Hence, all dependent variables in this study have shown a predictive relevance of greater than zero. Primarily, satisfaction was found to have the highest predictive relevance (Q2 predict=0.41), followed by perceived usefulness (Q2 predict=0.32), continuance intention (Q2 predict=0.27), and educational utilisation (Q^2 predict=0.20).

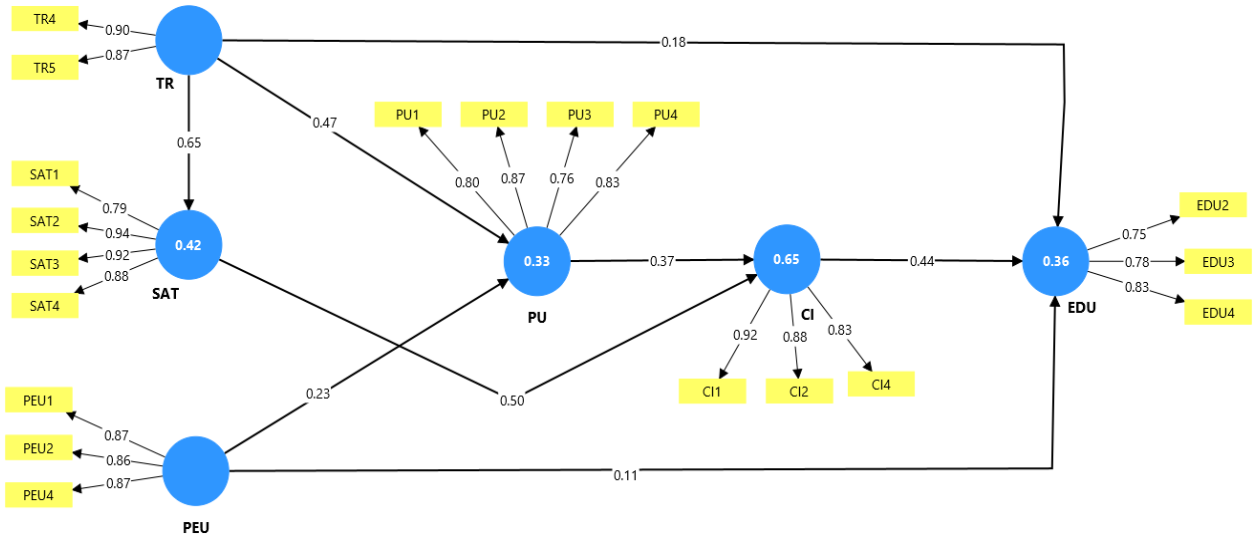

Figure 2: The Inner Model showing the Hypothesize relationships

Furthermore, the independents' practical impacts on dependent variables is captured through the effect size procedure. As suggested in the established SEM literature, f^2 values of 0.02, 0.15, and 0.35 represent small, medium, and large effect sizes, respectively. Results shown in Table 10 demonstrated mixed patterns, encompassing small, medium and large effects across all hypothesised correlations, with most of them being small. The impact of Trust (TR -> SAT) on satisfaction (f^2=.72) was the largest, followed by the impact of satisfaction (SAT -> CI) on continuance intention (f^2=.35). Similarly, the impact of trust (TR -> PU) on perceived usefulness (f^2=.30) was medium, suggesting that trust significantly explains how participants perceive AI tools as useful. Equally, the impact of continuance intention (CI -> EDU) on educational utilisation (f^2=.22), as well as the impact of perceived usefulness (PU -> CI) on continuance intention (f2=.19), were also medium in size, implying these variables have explanatory power for the outcome variables. Lastly, the impact of trust (TR -> EDU) on perceived ease of use was small (f^2=.04), whereas the impact of perceived ease of use (PEU -> EDU) on educational utilisation produced the smallest effect size (f^2=.04), indicating that students in this study perceived AI tools valuable regardless of whether it was predominantly ease to use.

Table 10: Effect Size for the Study Constructs

Proposed associations	f^2
CI -> EDU	0.22
PEU -> EDU	0.02
PEU -> PU	0.07
PU -> CI	0.19
SAT -> CI	0.35
TR -> EDU	0.04
TR -> PU	0.30
TR -> SAT	0.72

This study has proposed eight hypotheses to be tested with the structural equation modeling using SmartPLS software. Table 11 provides the summary of the hypotheses testing, where eight hypotheses were proposed to be tested. The results shown that trust in AI tools had significant

impact on perceived usefulness of AI (β=0.47, t=9.89, p=.000), indicating that students who had higher trust in these tools are more likely to perceived them as useful in their educational settings. Likewise, trust has also demonstrated a significant positive, albeit weak, on educational utilisation of AI technologies (β=0.18, t=3.03, p=.000). This implies that students who trust these technologies tend to use for educational purposes, even if their trust is not higher. In contrast, trust was found to have the highest positive and strong impact on satisfaction with AI tools (β=0.65, t=19.13, p=.000), suggesting that students who had higher trust tend to show strong satisfaction with these tools in relation to the educational context.

Perceived ease of use was another key assumption posited by this study. The results show that this construct was positively correlated with perceived usefulness (β=0.23, t=3.41, p=.000) and the educational utilisation of AI tools (β=0.11, t=1.74, p=.08), with the latter relationship being weak. This finding implies that those who perceive the AI as easy to use tend to rate its usefulness higher and use it for educational purposes. The weak impact of perceived ease of use on educational utilisation may indicate that, even though AI tools may be a bit challenging, their use for educational purposes is still deemed suitable.

Continuous intention to use technology is a critical component in information system research. As such, this study attempted to gauge which factors predict this continuance intention. The findings show that perceived usefulness (β=0.37, t=5.95, p=.000) and satisfaction (β=0.50, t=8.05, p=.000) are key drivers of continuous intention behaviour among the students when it comes to AI usage. This finding suggests that students who are highly satisfied with AI and find it useful are more likely to continue using these tools in the future, particularly in educational contexts. In contrast, continuance intention was found to have a statistically significant positive impact on the perceived educational utilisation of AI tools (β=0.44, t=6.80, p=.000), suggesting that students' continuance intention is associated with AI use for educational purposes.

Table 11: Summary of Hypotheses Testing

Hypothesized Relationships	Path Coefficient	T values	P values	Decision
CI -> EDU	0.44	6.80	0.00	Accepted
PEU -> EDU	0.11	1.74	0.08	Accepted
PEU -> PU	0.23	3.41	0.00	Accepted
PU -> CI	0.37	5.95	0.00	Accepted
SAT -> CI	0.50	8.05	0.00	Accepted
TR -> EDU	0.18	3.03	0.00	Accepted
TR -> PU	0.47	9.89	0.00	Accepted
TR -> SAT	0.65	19.13	0.00	Accepted

Note: CI=Continuous Intention. EDU= Educational utilisation . PEU= Perceived Ease of Use. PU= Perceived Usefulness. SAT= Satisfaction. TR= Trust.

4. Discussion

This study examined the factors that shape students' use of Gen AI for academic purposes. Drawing on the extended Technology Acceptance Model, this study incorporates satisfaction and trust, along

with perceived usefulness and perceived ease of use, to assess their impact on continuance intention and the educational utilisation of Gen AI platforms for learning. Overall, the findings suggest that students perceived the Gen AI platforms as easy to use (79%) and useful (76%), indicating that these perceptions are key drivers of adoption. Students also demonstrated higher satisfaction with Gen AI, with approximately three-quarters (74%) reporting they are highly satisfied. Approximately two-thirds of those surveyed in this study (61%) reported trusting Gen AI platforms, particularly because they believe these platforms provide accurate information and understand how the information they enter into AI will be used in the future. Furthermore, students indicated they intend to continue using AI tools (73%) and reported actually using them for academic and learning purposes (70%), suggesting that post-adoption experiences are evident among the study participants.

Six hypotheses were proposed and were tested using the PLS-SEM approach. The theoretical framework has demonstrated sufficient psychometric properties, including construct validity and reliability. Two indices of validity were addressed in this study, namely convergent and discriminant validity, while Cronbach's alpha coefficients and composite reliability were used as indices of internal consistency.

4.1. Trust, Satisfaction and Perceived Usefulness

The study's findings suggested that trust in Gen AI tools significantly and positively predicted their perceived usefulness. This implies that those who trust these platforms are more likely to find them useful for executing tasks more quickly and efficiently. Furthermore, there is a significant positive relationship between perceived trust and satisfaction among the study participants. This means that those who have greater trust in Gen AI are more likely to report higher levels of satisfaction. In technology-mediated environments, trust plays an essential role in the adoption process and can serve as an antecedent to other factors that directly contribute to the outcome variable.

The results of prior research support the positive relationship between trust and satisfaction in various contexts. For instance, recent scholarship on fintech and mobile banking applications has empirically verified this relationship, reporting a positive and statistically significant association [15][35]. Other recent studies on Gen AI tools have also reported similar trends. For example, [39] found that trust significantly influenced students' satisfaction with the ChatGPT platform, indicating that higher trust was associated with greater satisfaction. Similarly, [8] reported that Vietnamese students' perceived level of trust was positively predicted by their satisfaction with ChatGPT, providing further evidence that trust is a key factor in the technology adoption process.

4.2. Perceived Ease of Use and Perceived Usefulness

The positive relationship between perceived ease of use and perceived usefulness centres on the TAM Model's central proposition, indicating that users who perceive the technology as easy to use are highly likely to perceive it as useful [16]. Therefore, this link has long been established by countless studies in various contexts. The studies have reported a positive relationship between perceived ease of use and perceived usefulness in the adoption context of a digital library [24], e-learning application [18], mobile money transfer technology [13][45], and social media adoption [23].

Similar empirical support was also reported in the context of Gen AI platforms. Therefore, the findings of this study were consistent with recent studies. Using a sample of teachers to model their acceptance of Gen AI platforms, [21] found that teachers perceived Gen AI platforms as easy to use in the higher education context and that this perception significantly predicted their perceived usefulness. Moreover, [6] reported that Turkish students perceived the ease of use of Chatbots as positively correlated with their perceived usefulness. A similar notion was also reported by another recent study [10] in the context of ChatGPT. Taken together, these studies have shown that perceptual factors related to usefulness and ease of use remain critical components of the adoption process for generative artificial intelligence tools.

4.3. Determinants of Continuance Intention

Two constructs are hypothesised in this study to be major determinants of continuance intention: perceived usefulness and satisfaction. The findings suggested a significant positive relationship between perceived usefulness and continuance intention to use Gen AI for academic-related activities. This indicates that students who perceive these tools as useful are more likely to intend to continue using them for educational purposes. In the original TAM propositions, perceived usefulness positively predicts behavioural intention to adopt a technology or system [16][41]. As such, this relationship was supported in various contexts such as information systems adoption, e-government adoption [33], and mobile money transfer adoption [13].

Moreover, numerous studies have examined the relationship between perceived usefulness and behavioural intention rather than between continuance intention and perceived usefulness and have found empirical support for this relationship. These studies explored various contexts, such as electronic commerce, e-learning [18], mobile banking [25][26], and urban air mobility [46]. A similar empirical support was reported for the relationship between perceived usefulness and intention in the context of Gen AI platforms. For instance, [7] examined how Gen Z perceived ChatGPT in relation to their continuance intention to use this platform in the context of higher education. Therefore, these students' continuance intention was positively predicted by their perceptions of the platform's usefulness. Numerous studies have also supported this relationship in the context of Gen AI adoption [28][22][6][38][37][9][11].

Continuance intention was also hypothesised to be positively correlated with satisfaction. This relationship was supported empirically by this study, suggesting that students who are highly satisfied with Gen AI tools are more likely to intend to continue using them for academic purposes. This is in line with the prior studies on information systems adoption [40], fintech adoption [15], e-learning systems [30][32], mobile money transfer adoption [13], and mobile banking adoption [35]. Furthermore, this relationship was empirically tested in the context of Gen AI adoption and reported a positive relationship between satisfaction and continuous intention, indicating that students who are satisfied with these platforms are likely to continue using them for educational purposes [22][7][8][9][11].

4.4. Continuance Intention and Educational Utilisation

The main endogenous construct in this study is the educational utilisation of Gen AI platforms. The original TAM and its derived theoretical frameworks posit that behavioural intention positively predicts actual usage of the technology or system [16][41][42][17]. Therefore, this study has found empirical support for this relationship, which is consistent with the established literature. It indicates that students who intend to continue using Gen AI platforms are translating that intention into action and making these tools part of their daily activities. This finding corroborates the finding of the study of [28] who found that behavioural intention to use ChatGPT is positively correlated with its acceptance for educational purposes. Using the UTUAT framework, [37] found that use of behaviour (AI adoption) was significantly determined by behavioural intention among teachers, researchers, and students. In addition, actual use of ChatGPT in higher education was found to be determined by behavioural intention among students across nine institutions [10].

It is noteworthy that some prior studies [36][11] investigating the Gen AI context have only explored behavioural intention without examining actual usage. Therefore, this study fills that gap in the literature and provides empirical evidence on the relationship between continuous intention and actual usage (educational utilisation of Gen AI platforms).

4.5. Practical and Theoretical Contributions

This study has practical and theoretical implications. From a theoretical perspective, this study has examined the determinants of continuous intention to use Gen AI platforms and the educational utility of these platforms among university students. The study has extended the TAM framework by incorporating trust and satisfaction with other key constructs in the original framework, such as perceived usefulness, perceived ease of use, behavioural intention and actual use. This has contributed to the growing Gen AI literature by revealing the progression from initial intention to post-adoption assessment. Trust has contributed to perceived usefulness and educational utility, while perceived ease of use has had a significant impact on both. Perceived usefulness and satisfaction have subsequently contributed to continuous intention, which in turn has explained the Gen AI educational utility.

Another key theoretical contribution of the current study lies in extending the traditional endpoint of technology-adoption and continuance models. While TAM-based studies frequently emphasise behavioural intention, and post-adoption scholarship commonly focuses on continuance intention, this study has extended the framework to incorporate educational utilisation as a behavioural outcome beyond behavioural intention and continuance intention constructs. From the practical perspective, the findings of the present study have implications for universities, educators and Gen AI developers. First, even though trust, usefulness and satisfaction are key elements, persistent educational engagement involves more than purely granting access to Gen AI. Universities and educators should promote responsible and informed use of these platforms. Second, the relationship between continuous intention and educational utilisation suggests that educators and universities should take into consideration that encouraging continued use should not be considered as an ultimate objective. Institutions should focus on whether continued use translates into a purposeful,

learning-related practice. Finally, universities and educators should educate students about the ethical and accuracy of content generated on these platforms. Students should use these platforms as educational support, not as substitutes for their own critical thinking and task execution.

5. Conclusion

This study has investigated the determinants of continuous intention and the educational utility of Gen AI platforms among university students, using an extended TAM framework that incorporates two additional constructs: satisfaction and trust. This study sought to advance understanding of these students' engagement with Gen AI platforms through a quantitative approach. Whereas TAM-based research on Gen AI primarily emphasised the post-adoption elements such as continuance intention, this study has gone far beyond pure intentions to continue using these platforms to behavioural outcomes such as educational utilisation. Despite the study's key contributions, there are some limitations that should be considered when interpreting its findings. First, this study employed a cross-sectional survey, which limits the ability to gauge the impact of these determinants after the students gain experience with these platforms. The use of a cross-sectional design prevents the establishment of definitive causal relationships between the studied variables. Thus, future studies are encouraged to estimate the effects of these determinants using longitudinal designs. Second, although the sample is sufficient for SEM analysis, it can still be considered small given the low response rate. Future studies should employ a large sample size and include multiple educational institutions. Finally, although the TAM is a robust framework for estimating technology adoption and this study has incorporated two additional constructs, future studies are encouraged to consider other relevant variables, such as privacy concerns, perceived security concerns, information quality, academic integrity, and social influence. These constructs may increase the variance explained in the exogenous variable.

Author Contributions

- **Fathi Aidarus:** Conceptualization, methodology, data analysis, and writing – original draft.
- **Jusang Lee**: Survey questionnaire development, data collection, and investigation

Funding

- This research received no external funding

Conflicts of Interest

- The authors declare that they have no known competing financial interests or personal relationships that could have appeared to influence the work reported in this paper

Acknowledgement

- This research was not funded by any grant

REFERENCES

[1] Chan, C. K. Y., & Hu, W. (2023). Students' voices on generative AI: perceptions, benefits, and challenges in higher education. *International Journal of Educational Technology in Higher Education*, *20*(1), 43. https://doi.org/10.1186/s41239-023-00411-8

[2] Kasneci, E., Sessler, K., Küchemann, S., Bannert, M., Dementieva, D., Fischer, F., Gasser, U., Groh, G., Günnemann, S., Hüllermeier, E., Krusche, S., Kutyniok, G., Michaeli, T., Nerdel, C., Pfeffer, J., Poquet, O., Sailer, M., Schmidt, A., Seidel, T., … Kasneci, G. (2023). ChatGPT for good? On opportunities and challenges of large language models for education. *Learning and Individual Differences*, *103*, 102274. https://doi.org/10.1016/j.lindif.2023.102274

[3] Farrokhnia, M., Banihashem, S. K., Noroozi, O., & Wals, A. (2024). A SWOT analysis of ChatGPT: Implications for educational practice and research. *Innovations in Education and Teaching International*, *61*(3), 460–474. https://doi.org/10.1080/14703297.2023.2195846

[4] Cotton, D. R. E., Cotton, P. A., & Shipway, J. R. (2024). Chatting and cheating: Ensuring academic integrity in the era of ChatGPT. *Innovations in Education and Teaching International*, *61*(2), 228–239. https://doi.org/10.1080/14703297.2023.2190148

[5] Lo, C. K. (2023). What Is the Impact of ChatGPT on Education? A Rapid Review of the Literature. *Education Sciences*, *13*(4), 410. https://doi.org/10.3390/educsci13040410

[6] Gelibolu, M. F. (2026). Determinants of Higher Education Students' Use of Generative AI Chatbots: An Extended Technology Acceptance Model (TAM) Perspective. *Kastamonu Eğitim Dergisi*, *34*(2), 290–310. https://doi.org/10.24106/kefdergi.1939356

[7] Kavitha, K., & Joshith, V. P. (2025). Exploring Gen Z's satisfaction and continuance intention towards ChatGPT 4o in higher education: PLS-SEM insights using the ECM. *Journal of Educational Technology Systems*, *54*(2), 407–430. https://doi.org/10.1177/00472395251380294

[8] Lee, C. F., Lai, T. H., Eunike, I. J., & Tran, K. A. (2026). Trust, Usefulness, and Satisfaction in ChatGPT Adoption: An ELM–TAM Study among University Students. *International Journal of Information and Education Technology*, *16*(3), 625–639. https://doi.org/10.18178/ijiet.2026.16.3.2535

[9] Saxena, A., & Doleck, T. (2023). A structural model of student continuance intentions in ChatGPT adoption. *Eurasia Journal of Mathematics, Science and Technology Education*, *19*(12), em2366. https://doi.org/10.29333/ejmste/13839

[10] Stroud, R., & Du, J. (2025). Student acceptance of ChatGPT in higher education: A mixed-method study of attitudes, intentions, and concerns. *Journal of Applied Learning and Teaching*, *8*(2), 35–48. https://doi.org/10.37074/jalt.2025.8.2.7

[11] Yu, C., Yan, J., & Cai, N. (2024). ChatGPT in higher education: factors influencing ChatGPT user satisfaction and continued use intention. *Frontiers in Education*, *9*, 1354929. https://doi.org/10.3389/feduc.2024.1354929

[12] Ahmed, I. S. Y. (2018). *Examining Factors Influencing SNS News Consumption among University Students in Somalia: A Modified Motivational Model* [Doctoral Thesis]. International Islamic University Malaysia.

[13] Ahmed, I. S. Y., & Ali, Y. S. (2017). Determinants of continuance intention to use mobile money transfer: An integrated model. *Journal of Internet Banking and Commerce*, *22*(S7), 1–24. http://www.icommercecentral.com

[14] Aidarus, F. (2025). *The Role of Generative Artificial Intelligence in Higher Education*. LAMBERT Academic Publishing.

[15] Aidarus, F., & Abu, A. (2025). The effect of fintech on the user's trust, satisfaction, and continuance intention in Islamic banks – the perspective of a developing country. *Journal of Asian Scientific Research*, *15*(1), 81–97. https://doi.org/10.55493/5003.v15i1.5331

[16] Davis, F. D. (1989). Perceived usefulness, perceived ease of use, and user acceptance of information technology. *MIS Quarterly: Management Information Systems*, *13*(3), 319–340. https://doi.org/10.2307/249008

[17] Venkatesh, V., & Davis, F. D. (2000). Theoretical extension of the Technology Acceptance Model: Four longitudinal field studies. *Management Science*, *46*(2), 186–204. https://doi.org/10.1287/mnsc.46.2.186.11926

[18] Putra, I. S., Triatmanto, B., & Zuhro, D. (2021). The Effect of Perceived Ease of Use on User's Intention to Use E-Learning with Moodle Application in Higher Education Mediated by Perceived Usefulness. *Management and Economics Journal (MEC-J)*, *5*(3), 211–220. https://doi.org/10.18860/mec-j.v5i3.13146

[19] Dhaha, I. S. Y., & Ali, A. Y. S. (2014a). Behavioral intention and satisfaction with 3G technology among students in Somalia: A structural equation modeling study. *World Applied Sciences Journal*, *32*(2), 243–252. https://doi.org/10.5829/idosi.wasj.2014.32.02.331

[20] Dhaha, I. S. Y., & Ali, A. Y. S. (2014b). Mediating effects of behavioral intention between 3G predictors and service satisfaction. *Malaysian Journal of Communication*, *30*(Special Issue), 107–128. https://doi.org/https://ejournal.ukm.my/mjc/article/view/14988

[21] Al-Abdullatif, A. M. (2024). Modeling Teachers' Acceptance of Generative Artificial Intelligence Use in Higher Education: The Role of AI Literacy, Intelligent TPACK, and Perceived Trust. *Education Sciences*, *14*(11), 1209. https://doi.org/10.3390/educsci14111209

[22] Alshammari, S. H., & Babu, E. (2025). The mediating role of satisfaction in the relationship between perceived usefulness, perceived ease of use and students' behavioural intention to use ChatGPT. *Scientific Reports*, *15*(1), 7169. https://doi.org/10.1038/s41598-025-91634-4

[23] Alduaij, M. (2019). Employing the technology acceptance model to explore the trends of social media adoption and its effect on perceived usefulness and perceived ease of use. *Journal of Information Technology Management*, *11*(2), 129–143. https://doi.org/10.22059/jitm.2019.290075.2405

[24] Hassan, M. M., & Ali, A. Y. S. (2014). Impact of Interface Characteristics on The Perceived Ease of Use and Perceived Usefulness of Digital Library Adoption Among Post-Graduate Students in Somalia. *European Journal of Business and Management Www.Iiste.Org ISSN*, *6*(35), 98–103. www.iiste.org

[25] Alalwan, A. A., Dwivedi, Y. K., Rana, N. P. P., & Williams, M. D. (2016). Consumer adoption of mobile banking in Jordan: Examining the role of usefulness, ease of use, perceived risk and self-efficacy. *Journal of Enterprise Information Management*, *29*(1), 118–139. https://doi.org/10.1108/JEIM-04-2015-0035

[26] Sayid, O., & Echchabi, A. (2013). Attitude of Somali Customers towards Mobile Banking Services: The Case of Zaad and Sahal Services. *Economic Insights-Trends and Challenges*, *2*(3), 9–16. https://www.cia.gov/library/publications/the-world-factbook/fields/2116.html#so,

[27] Al-Emran, M., Mezhuyev, V., & Kamaludin, A. (2018). Technology Acceptance Model in M-learning context: A systematic review. *Computers and Education*, *125*, 389–412. https://doi.org/10.1016/j.compedu.2018.06.008

[28] Almogren, A. S., Al-Rahmi, W. M., & Dahri, N. A. (2024). Exploring factors influencing the acceptance of ChatGPT in higher education: A smart education perspective. *Heliyon*, *10*(11), e31887. https://doi.org/10.1016/j.heliyon.2024.e31887

[29] Aidarus, F., Fitch, T., Beukman, P., & Weber, A. (2026). The Impact of Blended Learning (Generative Artificial Intelligence) Approach on Student Learning Outcomes in Higher Education. In K. Kurita, P. Ilic, R. J. Howlett, & L. C. Jain (Eds.), *Smart Innovation, Systems and Technologies: 481 SIST* (pp. 44–56). Springer Nature. https://doi.org/10.1007/978-3-032-20458-5_5

[30] Al-Hawamleh, A. (2024). Exploring The Satisfaction and Continuance Intention to Use E-Learning Systems: An Integration of the Information Systems Success Model and the Technology Acceptance Model 201 Original Scientific Paper. *InternationalJournal of Electrical and Computer Engineering Systems*, *15*(2), 201–214.

[31] Pham, L., Limbu, Y. B., Bui, T. K., Nguyen, H. T., & Pham, H. T. (2019). Does e-learning service quality influence e-learning student satisfaction and loyalty? Evidence from Vietnam. *International Journal of Educational Technology in Higher Education*, *16*(1), 1–26. https://doi.org/10.1186/s41239-019-0136-3

[32] Roca, J. C., Chiu, C. M., & Martínez, F. J. (2006). Understanding e-learning continuance intention: An extension of the Technology Acceptance Model. *International Journal of Human Computer Studies*, *64*(8), 683–696. https://doi.org/10.1016/j.ijhcs.2006.01.003

[33] Li, W., & Xue, L. (2021). Analyzing the critical factors influencing post-use trust and its impact on Citizens' continuous-use intention of E-Government: Evidence from Chinese municipalities. *Sustainability*, *13*(14). https://doi.org/10.3390/su13147698

[34] Jafri, J. A., Mohd Amin, S. I., Abdul Rahman, A., & Mohd Nor, S. (2024). A systematic literature review of the role of trust and security on Fintech adoption in banking. *Heliyon*, *10*(1), e22980. https://doi.org/10.1016/j.heliyon.2023.e22980

[35] Saibaba, S. (2024). Examining the determinants of mobile banking App continuance intention in India: An extension of the IS success model. *Journal of Internet Commerce*, *23*(1), 50–89. https://doi.org/10.1080/15332861.2023.2236428

[36] Choudhury, A., & Shamszare, H. (2023). Investigating the impact of user trust on the adoption and use of ChatGPT: Survey analysis. *Journal of Medical Internet Research*, *25*(e47184), 1–11. https://doi.org/10.2196/47184

[37] Rana, M. M., Siddiqee, M. S., Sakib, M. N., & Ahamed, M. R. (2024). Assessing AI adoption in developing country academia: A trust and privacy-augmented UTAUT framework. *Heliyon*, *10*(18). https://doi.org/10.1016/j.heliyon.2024.e37569

[38] Pham, L., Klaus, T., & Bateh, J. (2025). Key factors influencing intention to use ChatGPT: An empirical study of U.S. students. *Acta Psychologica*, *260*, 105516. https://doi.org/10.1016/j.actpsy.2025.105516

[39] Wamba-Taguimdje, S. L., Wamba, S., & Twinomurinzi, H. (2024). Why should users take the risk of sustainable use of generative artificial intelligence chatbots: An exploration of ChatGPT's use. *Journal of Global Information Management*, *32*(1). https://doi.org/10.4018/JGIM.365600

[40] Bhattacherjee, A. (2001). Understanding Information Systems Continuance: An Expectation-Confirmation Model. *Source: MIS Quarterly*, *25*(3), 351–370. http://www.jstor.orgStableURL:http://www.jstor.org/stable/3250921

[41] Davis, F. D., Bagozzi, R. P., & Warshaw, P. R. (1992). Extrinsic and intrinsic motivation to use computers in the workplace'. *Journal of Applied Social Psychology*, *22*(14), 1111–1132.

[42] Venkatesh, V., Morris, M. G., Davis, G. B., & Davis, F. D. (2003). User Acceptance of Information Technology: Toward a Unified View. In *Source: MIS Quarterly* (Vol. 27, Number 3).

[43] Hair, J. F., Hult, G. T. M., Ringle, C. M., Sarstedt, M., Danks, N. P., & Ray, S. (2021). *Partial Least Squares Structural Equation Modeling (PLS-SEM) Using R: A Workbook*. Springer. https://doi.org/10.1007/978-3-030-80519-7

[44] Hair, J. F., Ringle, C. M., & Sarstedt, M. (2011). PLS-SEM: Indeed a silver bullet. *Journal of Marketing Theory and Practice*, *19*(2), 139–152. https://doi.org/10.2753/MTP1069-6679190202

[45] Ali, A. Y. S., & Dhaha, I. S. Y. (2014). Factors influencing mobile money transfer adoption among Somali students. *International Journal of Business, Economics and Law*, *4*(1), 180–188. https://www.ijbel.com/wp-content/uploads/2014/01/klb3103-factors-influencing-mobile-money-transfer-adoption-among-somali-students-ali-yassin-sheikh-ali-ijbel-vol-3-issue-2-bsness.pdf

[46] Yao, E., Guo, D., Liu, S., & Zhang, J. (2024). The role of technology belief, perceived risk and initial trust in users' acceptance of urban air mobility: An empirical case in China. *Multimodal Transportation*, *3*(4). https://doi.org/10.1016/j.multra.2024.100169