frontiers in Education

TYPE Original Research
PUBLISHED 03 September 2026
DOI 10.3389/feduc.2026.1923624

Check for updates

OPEN ACCESS

EDITED BY
Dong Yang,
Krirk University, Thailand

REVIEWED BY
Ziao Hu,
Central South University, China
Maria Gabriela Espinoza Bravo,
State University of Milagro, Ecuador

*CORRESPONDENCE
Bingjie Xiao
2983499054@qq.com

RECEIVED 30 June 2026
REVISED 13 August 2026
ACCEPTED 13 August 2026
PUBLISHED 03 September 2026

CITATION
Wang M, Xiao B and Zhang S (2026) External support and university faculty's AI-TPACK: a serial mediation model of perceived ease of use, perceived usefulness, and behavioral intention. Front. Educ. 11:1923624. doi: 10.3389/feduc.2026.1923624

COPYRIGHT
© 2026 Wang, Xiao and Zhang. This is an open-access article distributed under the terms of the Creative Commons Attribution License (CC BY). The use, distribution or reproduction in other forums is permitted, provided the original author(s) and the copyright owner(s) are credited and that the original publication in this journal is cited, in accordance with accepted academic practice. No use, distribution or reproduction is permitted which does not comply with these terms.

External support and university faculty's AI-TPACK: a serial mediation model of perceived ease of use, perceived usefulness, and behavioral intention

Meiqian Wang[1,2], Bingjie Xiao[1]* and Shuping Zhang[1]

[1]Normal School of Vocational Techniques, Hubei University of Technology, Wuhan, Hubei, China, [2]Hubei Institute of Vocational Education Development, Hubei University of Technology, Wuhan, Hubei, China

Introduction: Artificial intelligence (AI) increasingly requires university faculty to integrate technology, pedagogy, and disciplinary content, as reflected in the Artificial Intelligence-enhanced Technological Pedagogical Content Knowledge (AI-TPACK) framework. Drawing on the Technology Acceptance Model (TAM) and AI-TPACK research, this study examined how external support (ES) is associated with faculty's self-reported AI-TPACK through perceived ease of use (PEOU), perceived usefulness (PU), and behavioral intention to use AI (BI).
Methods: A cross-sectional survey was conducted with 593 university faculty members in China. The measurement structure was evaluated using exploratory and confirmatory factor analyses, followed by structural equation modeling. Indirect effects were assessed using 5,000 bootstrap resamples and 95% confidence intervals.
Results: The five constructs demonstrated acceptable reliability and a distinguishable five-factor measurement structure. ES was positively associated with self-reported AI-TPACK ($\beta = .238$, $p < .001$). The total indirect effect of ES on AI-TPACK through the specified mediators was also statistically supported (B = .287, 95% bootstrap CI [.203, .386]). The specific indirect pathway through BI alone was not supported, whereas several pathways involving PEOU and PU had bootstrap confidence intervals that excluded zero.
Discussion: The findings indicate that institutional support, technology-acceptance beliefs, behavioral intention, and AI-TPACK are statistically connected within the proposed structural framework. In particular, PEOU and PU appear to play important roles in the indirect associations between ES and AI-TPACK.

KEYWORDS
AI-TPACK, behavioral intention to use AI, external support, perceived ease of use, perceived usefulness, technology acceptance model

1 Introduction

Smart education requires university faculty to develop integrated technological, pedagogical, and content-related knowledge for the responsible use of artificial intelligence (AI) in teaching. Traditional information and communication technology (ICT) skills alone are increasingly insufficient for the demands of AI-supported instruction (Trapitsyn and Tursynbaeva, 2025). The Technological Pedagogical Content Knowledge (TPACK) framework, developed from Shulman's (1987) pedagogical content knowledge and

formalized by Mishra and Koehler, explains how technology, pedagogy, and subject content intersect in teachers' professional knowledge (Koehler and Mishra, 2009; Mishra and Koehler, 2006). Recent extensions of TPACK to artificial intelligence, including Artificial Intelligence-enhanced Technological Pedagogical Content Knowledge (AI-TPACK) and intelligent-TPACK, further emphasize teachers' capacity to understand, select, and pedagogically integrate AI tools rather than merely operate general digital technologies (Chiu, 2026; Hava and Babayiğit, 2025). In the present study, AI-TPACK is assessed through faculty members' self-reports; accordingly, the construct represents perceived rather than performance-assessed competence.

Prior research has examined several parts of the relationship between technology acceptance and teachers' technology-related competence, but important questions remain about how these elements are connected in the AI-TPACK context. Existing studies often place teachers' competence on the antecedent side of technology acceptance. For example, Antonietti et al. (2022) examined how teachers' self-assessed digital competence relates to Technology Acceptance Model (TAM) beliefs and use intention in Swiss vocational education, while Al-Abdullatif (2024) modeled AI literacy and intelligent TPACK as antecedents or mediating constructs in university teachers' acceptance of generative AI in Saudi Arabia. Other research has shown that institutional or school support is related to teachers' technology beliefs and integration (Lai et al., 2022; Shen et al., 2024; Wang and Zhao, 2021). The present study asks a complementary question: whether external support (ES) is statistically associated with university faculty's AI-TPACK through perceived ease of use (PEOU), perceived usefulness (PU), and behavioral intention to use AI (BI). Its theoretical contribution is therefore not to claim a new causal sequence within TAM, but to connect a contextual antecedent (ES), technology-acceptance beliefs and intention, and perceived AI-integrative competence in one measurement-validated structural model, while decomposing the direct and specific indirect associations among these constructs. This positioning extends recent AI-TPACK/TAM research by treating AI-TPACK as the focal outcome rather than only as a predictor of technology acceptance.

Guided by TAM, the study specifies ES → PEOU → PU → BI → AI-TPACK as a theoretically motivated statistical ordering. The ordering reflects the TAM proposition that ease-of-use beliefs can contribute to usefulness judgments and that these beliefs can shape intention to use a technology, while repeated engagement may be associated with the development of technology-related professional knowledge (Davis, 1989; Venkatesh and Davis, 2000). This ordering is a hypothesis to be evaluated statistically rather than a claim about an established developmental process. Because all variables were measured at the same time, reverse or reciprocal relationships remain plausible and are considered explicitly in the interpretation and limitations.

2 Literature review

2.1 The relationship between ES and AI-TPACK

ES constitutes a critical contextual condition influencing teachers' professional development and technology integration practices. At the institutional level, ES is primarily manifested in technical training, hardware and software resources, evaluation and incentive mechanisms, and organizational climate (Ertmer, 1999). Prior research has indicated that teachers' professional development depends not only on online course resources and technical tools but also on administrative support, peer collaboration, and sustained professional guidance (Rutherford-Quach et al., 2021). In particular, for the deep integration of AI technologies into teaching, systematic ES is considered an essential safeguard for improving teachers' digital competence (Theodorio, 2024).

AI-TPACK refers to teachers' integrated knowledge for connecting AI technology with pedagogy and disciplinary content in AI-supported educational environments. Compared with traditional TPACK, AI-TPACK places greater emphasis on understanding, selecting, and pedagogically applying AI technologies within human-AI collaborative settings (Ajayi, 2024; Hava and Babayiğit, 2025). In this study, the outcome is a self-reported AI-TPACK score rather than an objective performance measure. Thus, higher scores indicate stronger perceived capability to integrate AI-related technological, pedagogical, and content knowledge, not independently observed teaching competence.

In the process of educational digitalization, the development of teachers' digital literacy increasingly depends on systematic ES. Fernández-Batanero et al. (2021) pointed out that multiple factors constrain the development of teachers' digital literacy, among which the most prominent obstacles are a lack of continuous professional training, insufficient technical and teaching resource support, limited time, and weak ES at the institutional level. Examining the practice of digital transformation in universities, relevant findings indicate that teachers and students currently use digital media to a limited extent, primarily for assimilative tasks such as learning management systems (Henderson et al., 2017; Kirkwood and Price, 2014). The research suggests that universities should establish supporting mechanisms and support systems at the institutional level and introduce dedicated development strategies to promote broader application of educational technology in classroom teaching (Bond et al., 2018). Based on the above analysis, this study proposes the following hypothesis:

H1: ES is positively associated with university faculty's AI-TPACK.

2.2 The intermediary role of PEOU

PEOU is a core dimension of the TAM, originally proposed by Davis (1989). It refers to an individual's subjective perception of how easy and convenient it is to operate a new technology or system. As a key psychological antecedent, PEOU directly affects teachers' willingness to accept technology and their subsequent classroom integration behaviors. Prior research has established that PEOU serves as an important prerequisite for promoting the application of AI in teaching, and that complete, accessible technical services and robust infrastructure function as essential guarantees for the sustained use of AI (Zhang et al., 2025).

A growing body of empirical evidence supports the positive relationship between ES and PEOU. Al-Adwan et al. (2025)

found that ES can significantly and positively predict teachers' PEOU. Similarly, facilitating conditions, which encompass technical infrastructure, institutional support, and timely assistance, have been shown to significantly enhance teachers' PEOU of AI tools (Zhu et al., 2026). Conversely, insufficient resource provision and a lack of technical support can diminish PEOU, thereby inhibiting technology acceptance (Ofem et al., 2025). Research targeting the teacher population further indicates that institutional support and resource assurance at the organizational level can not only directly influence the willingness to adopt generative AI but also indirectly affect it through individual cognitive factors such as intrinsic motivation and self-efficacy (Hazzan-Bishara et al., 2025). These findings collectively suggest that ES functions as a critical enabler of PEOU, providing the external conditions necessary for teachers to perceive AI tools as easy and convenient to use.

PEOU may also be associated with teachers' technology-related competence. Teachers who perceive AI tools as easier to learn and operate may be more willing to experiment with them and accumulate relevant technological and pedagogical knowledge (Al-Abdullatif, 2024; Antonietti et al., 2022). At the same time, the reverse direction is also plausible: faculty with stronger prior AI-related knowledge may perceive the same tools as easier to use. The cross-sectional design cannot adjudicate between these possibilities. The present hypothesis therefore concerns a statistical indirect association within the specified model rather than a proven temporal mechanism.

H2: PEOU statistically mediates the association between ES and AI-TPACK.

2.3 The intermediary role of PU

PU is a core construct of TAM. Davis (1989) defined it as an individual's subjective belief that using a specific technology or system can improve work performance. Unlike PEOU, which focuses on the operational experience, PU centers on teachers' subjective judgment of the instructional value and practical effectiveness of technology, thereby serving as a key intrinsic motivator that drives teachers to deeply integrate technology into their teaching practices (Davis, 1989). Both meta-analyses and empirical evidence indicate that PU is a robust predictor of teachers' acceptance of AI technology (Lu and Lin, 2025). In the context of the widespread adoption of intelligent educational tools such as generative AI, the explanatory power of PU for adoption intention and behavior continues to increase (Hazzan-Bishara et al., 2025).

A substantial body of research has confirmed that organizational support and technical training constitute important external conditions for promoting teachers' technology adoption (Al-Senaidi et al., 2009). Empirical studies grounded in self-determination theory have shown that the multidimensional support provided by schools, including leadership support, expert guidance, and peer assistance, can satisfy teachers' psychological needs for professional development, enhance their intrinsic motivation for technology integration, and strengthen positive teaching beliefs (Chiu, 2022). Longitudinal research focusing on Chinese teachers further confirmed that school technology support environments can positively shape teachers' technological beliefs and knowledge reserves, thereby significantly promoting classroom technology integration behaviors (Lai and Shi, 2025). Specifically, the more sufficient the ES perceived by teachers is, the more positive their perception of the value and utility of technology becomes, and the smoother the subsequent implementation of teaching practices. These findings collectively suggest that ES functions as a critical antecedent of PU, providing the external resources and institutional backing that enable teachers to recognize the practical benefits of AI tools for their instructional work.

Within an integrated TAM-AI-TPACK perspective, PU may transmit part of the association between institutional support and AI-TPACK. ES can provide opportunities to encounter AI tools in relevant teaching contexts, while faculty who perceive clear instructional value may be more inclined to invest effort in developing related knowledge and practices (Nelson and Hawk, 2020; Zhao, 2026). As with PEOU, this hypothesized mediation represents an association in a cross-sectional model rather than evidence that usefulness beliefs necessarily precede AI-TPACK development.

H3: PU statistically mediates the association between ES and AI-TPACK.

2.4 The intermediary role of behavioral intention (BI)

BI refers in this study to faculty members' willingness to learn AI technologies, experiment with new AI teaching tools, and share AI-use experiences with colleagues. In technology-acceptance research, behavioral intention is commonly positioned as a proximal antecedent of technology engagement, translating cognitive evaluations of a technology into a willingness to act (Or, 2024; Venkatesh et al., 2003). Its inclusion is therefore theoretically relevant because perceiving AI as easy to use or instructionally useful does not necessarily lead to competence-related engagement unless faculty are also willing to learn about, experiment with, and continue exploring AI applications.

ES may be associated with BI by reducing practical barriers and increasing opportunities to learn about AI tools. Supportive infrastructure, training, and collegial conditions can strengthen technology-related self-efficacy and willingness to use AI in teaching (Kong et al., 2024; Molefi et al., 2024). Nevertheless, ES need not operate only through BI; the present model allows direct paths from ES, PEOU, and PU to BI so that the unique specific indirect effect through BI can be distinguished from longer serial pathways.

BI may in turn be associated with AI-TPACK because faculty who intend to learn and try AI tools are more likely to report engagement with AI-related pedagogical and technological practices. Prior studies show that willingness or intention to use technology is related to technology integration and TPACK-related outcomes (Scherer et al., 2018; Yue et al., 2024). However, the present study did not measure actual classroom AI use. BI is therefore interpreted as self-reported intention to engage with AI, not as observed behavior or as a confirmed bridge from cognition to classroom practice.

H4: BI statistically mediates the association between ES and AI-TPACK.

2.5 Theoretical model and hypothesized statistical ordering

The proposed model integrates two strands of prior research. First, institutional support and professional-development conditions are associated with teachers' technology beliefs, knowledge, and integration practices (Lai et al., 2022; Shen et al., 2024; Wang and Zhao, 2021). Second, TAM proposes structured relationships among PEOU, PU, and intention to use technology (Davis, 1989; Venkatesh and Davis, 2000). Combining these perspectives allows the study to test whether the association between ES and AI-TPACK is distributed across several direct and indirect pathways rather than being represented by a single bivariate relationship.

The focal serial sequence is ES → PEOU → PU → BI → AI-TPACK. PEOU is placed before PU because TAM theorizes that a technology perceived as requiring less effort may be judged as more useful; PEOU and PU are then modeled as antecedents of BI. BI is positioned before AI-TPACK because intention to engage with AI may accompany greater reported involvement in developing AI-related pedagogical knowledge. Importantly, the model also includes direct paths among the constructs rather than assuming a purely serial process. The hypothesized ordering is theoretically motivated, but the concurrent measurement design cannot verify temporal precedence, developmental order, or causal direction.

H5: PEOU, PU, and BI jointly form a statistically significant serial indirect pathway between ES and AI-TPACK.

Figure 1 presents the hypothesized structural model. The model is intended to evaluate a theory-guided pattern of associations and indirect effects; it is not presented as a complete, optimal, or confirmed cognitive process.

3 Materials and methods

3.1 Participants

The study used a cross-sectional questionnaire survey in 2025. Participants were university faculty members from 11 universities in Hubei Province, China, representing a range of institutional types, including comprehensive, science and engineering, normal, political science and law, and agriculture and forestry universities. Faculty members were nominated by their respective institutions to participate in the digital literacy enhancement program and AI education case initiative in 2025. The questionnaire was administered online in August 2025 during the activities. Participation was voluntary, and all respondents provided informed consent. Participation in these initiatives may have attracted faculty with greater prior interest in AI or greater access to technology-related support than the broader faculty population, creating a possible self-selection bias.

A total of 611 completed questionnaires were received. Eighteen records were excluded according to two predefined data-quality criteria: seven questionnaires were excluded because their completion time was less than 60 s, and 11 questionnaires were excluded because the same response option was selected for all items, indicating invariant responding. No questionnaire was excluded solely because responses varied across items within the same scale. This procedure left 593 valid questionnaires, corresponding to a valid questionnaire rate of 97.1%. Sample characteristics are presented in Table 1.

3.2 Variables

The questionnaire contained 18 items measuring ES (6 items), PU (3 items), PEOU (3 items), BI (3 items), and AI-TPACK (3 items). All items used a five-point Likert response format, and construct scores were calculated as the mean of their items. Generic technology wording in the source measures was contextualized to AI-supported university teaching. Before formal data collection, the item wording was reviewed by three experts in the field of educational technology, who assessed the clarity, relevance, and conceptual consistency of the items and provided suggestions for wording refinement. A pilot test was subsequently conducted with 21 university teachers. Participants completed a paper-based version of the questionnaire and then provided feedback on item clarity and response time using a short feedback form that asked them to evaluate the clarity of each item. Based on the pilot feedback, the wording of five items (ES-3, ES-4, ES-5, PU-2, and PEOU-2) was refined to eliminate ambiguity. The remaining items were unchanged because more than 90% of the pilot participants rated them as

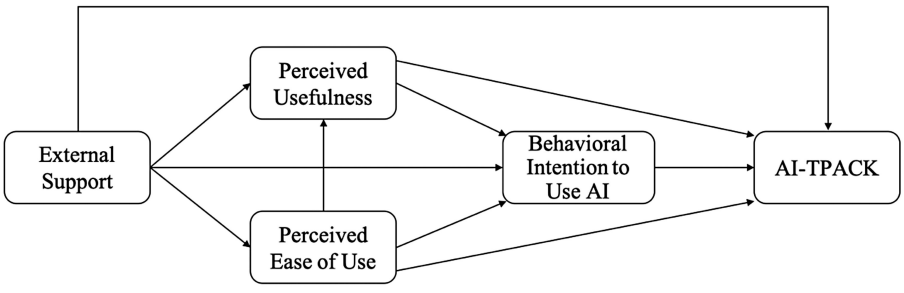

FIGURE 1
Hypothesized structural model linking ES, PEOU, PU, BI, and AI-TPACK. The arrows represent a theoretically specified statistical ordering; the cross-sectional design does not establish temporal or causal direction.

TABLE 1 Demographic characteristics of participants.

Variable	Category	Number	Percentage (%)
Gender	Male	268	45.2
	Female	325	54.8
Age Range	Under 30	212	35.8
	31–40	341	57.5
	41–50	24	4
	Over 50	16	2.7
Highest Degree	Bachelor's degree	170	28.7
	Master's degree	66	11.1
	Doctoral degree	357	60.2
Academic Title	Lecturer	123	20.7
	Associate professor	321	54.1
	Professor	149	25.1
Subject Area	Social sciences	429	72.3
	Natural sciences	164	27.7

clear. The exact English wording of all administered items was provided in Supplementary Table S1.

3.2.1 External support (ES)

The six-item ES scale was developed with reference to research on institutional and school support for teachers' technology integration, particularly Shen et al. (2024), and adapted to the AI-supported higher-education context. Items represent technical infrastructure, training support, evaluation orientation, and organizational climate. Responses used a 5-point scale from 1 (completely unsupportive) to 5 (completely supportive), and the mean of the six items was used as the ES score. The items referred to the broader institutional support environment rather than to the specific training or case-initiative activities through which participants were recruited.

3.2.2 AI-TPACK

AI-TPACK was measured with three adapted items informed by the TPACK assessment framework of Schmidt et al. (2009) and subsequent work on technology-integration knowledge structures (Willermark, 2018). The three items represent AI-related technological knowledge, AI-based pedagogical integration, and AI-enhanced content integration. Responses used a 5-point scale, and their mean was used as the AI-TPACK score.

3.2.3 Perceived usefulness (PU)

PU was measured with three items adapted from Davis's (1989) perceived-usefulness framework to AI-supported teaching. The items assess whether AI can improve task efficiency, support personalized learning, and help faculty track student progress or adjust teaching. Responses ranged from 1 (strongly disagree) to 5 (strongly agree); the three-item mean formed the PU score.

3.2.4 Perceived ease of use (PEOU)

PEOU was measured with three items adapted from Davis's (1989) TAM scale. The items address ease of getting started, ease of learning functions independently, and the feasibility of using AI teaching tools without a specialized technical background. Responses used a 5-point agreement scale, and the mean of the three items formed the PEOU score.

3.2.5 Behavioral intention to use AI (BI)

The BI measure was adapted from An et al. (2023), who operationalized teachers' behavioral intention toward AI-supported teaching in terms of their willingness to learn from AI-related teaching experiences and cases, share AI teaching resources and experiences, and use AI in future teaching. Following this teacher-contextualized approach, the three items in the present study assessed faculty members' willingness to learn AI technologies, experiment with new AI teaching tools, and share AI-use experiences with colleagues. Responses ranged from 1 (strongly disagree) to 5 (strongly agree), with higher mean scores indicating a stronger intention to engage in AI-related learning, instructional experimentation, and use.

3.3 Analysis approaches

This study used SPSS 27.0 for data screening, descriptive statistics, construct-specific reliability analysis, Pearson correlation analysis, and exploratory factor analysis (EFA). For the EFA, principal axis factoring with Promax rotation and Kaiser normalization was applied, and factor retention was guided by the Kaiser criterion (initial eigenvalues > 1). The pattern matrix was examined to assess primary factor loadings and cross-loadings. As a supplementary diagnostic for potential common method variance, Harman's single-factor test was conducted using an unrotated principal-component solution of all 18 items. Given the limitations of this procedure, the Harman test was treated only as a preliminary diagnostic rather than as evidence that common method bias was absent.

The measurement model was subsequently evaluated using confirmatory factor analysis (CFA). Model fit was assessed using χ^2/df, RMSEA, SRMR, CFI, and TLI, while standardized factor loadings, composite reliability (CR), average variance extracted (AVE), and the Fornell-Larcker criterion were used to examine convergent and discriminant validity. A structural equation model (SEM) was then estimated to test the hypothesized paths among ES, PEOU, PU, BI, and AI-TPACK. Direct, indirect, and total effects were estimated, and indirect effects were evaluated using 5,000 bootstrap resamples and 95% confidence intervals. An indirect effect was considered statistically supported when its 95% bootstrap confidence interval did not include zero. Gender was binary-coded as 1 = male and 2 = female, whereas teaching experience was entered as a continuous measure of teaching years. Both variables were included as covariates predicting AI-TPACK in the structural model.

4 Results

4.1 Measurement quality and construct validity

The analysis provided construct-specific reliability and a formal assessment of the measurement structure. Cronbach's α ranged from.788 to.898 across the five constructs, with an overall α of.898 for the 18-item instrument (Table 2). The KMO value was.889 and Bartlett's test of sphericity was significant, $\chi^2(153) = 5{,}457.501$, $p < .001$, supporting factorability (Table 3).

The EFA identified five factors with initial eigenvalues greater than 1 (6.617, 2.400, 1.490, 1.329, and 1.205). After extraction, the five-factor solution accounted for 62.207% of the variance (Table 4). The Pattern Matrix showed that all 18 items loaded most strongly on their theoretically corresponding factors, with absolute primary loadings ranging from.553 to.885. All absolute cross-loadings were below.20, with the largest cross-loading being.152, indicating a clear simple factor structure and supporting the empirical distinctiveness of ES, PEOU, PU, BI, and AI-TPACK (Table 5).

The five-factor CFA showed acceptable fit, $\chi^2/df = 2.546$, RMSEA = .051, SRMR = .044, CFI = .964, and TLI = .956 (Table 6; Figure 2). Standardized CFA loadings ranged from.659 to.826; CR values ranged from.800 to.915 and AVE values from.568 to.642 (Table 7). Fornell-Larcker comparisons showed that the square root of AVE for each construct exceeded its correlations with the other latent variables (Table 8). Together, these results support acceptable internal consistency, convergent validity, and discriminant validity for the five-factor measurement model.

As a supplementary diagnostic for potential common method variance, the first unrotated factor in Harman's single-factor test accounted for 36.760% of the total variance, below the 40% reference value.

4.2 Descriptive statistics and correlations

Table 9 presents the descriptive statistics and zero-order correlations. All correlations were positive and statistically significant at $p < .01$. AI-TPACK correlated with ES (r = .558), PU (r = .392), PEOU (r = .376), and BI (r = .300), while PU and PEOU correlated at r = .392. The observed construct means ranged from 3.41 to 3.71, with standard deviations from.86 to 1.03; score ranges are reported in Table 10. Before examining the structural paths, multicollinearity diagnostics were conducted for the predictor variables in each equation. Across the equations, VIF values ranged from 1.000 to 1.404 and tolerance values ranged from.712 to 1.000. All values were within commonly accepted limits (VIF < 5 and tolerance >.20), indicating no evidence of problematic multicollinearity among the predictors. The complete VIF and tolerance statistics for each predictor are reported in Supplementary Table S2.

TABLE 2 Construct-specific reliability.

Construct	Cronbach's α	Number of Items
ES	0.898	6
PU	0.840	3
PEOU	0.828	3
BI	0.823	3
AI-TPACK	0.788	3
Total	0.898	18

ES, external support; PU, perceived usefulness; PEOU, perceived ease of use; BI, behavioral intention to use AI; AI-TPACK, artificial intelligence-enhanced technological pedagogical content knowledge.

TABLE 3 KMO measure and bartlett's test of sphericity.

KMO		0.889
Bartlett's Test of Sphericity	Approx. $\chi 2$	5,457.501
	df	153
	p	<.001

4.3 Structural model and indirect effects

The structural model showed acceptable fit, $\chi^2(159) = 371.704$, $\chi^2/df = 2.338$, RMSEA = .047, SRMR = .047, CFI = .961, and TLI = .953 (Table 11; Figure 3). Component paths are reported in Table 12, Panel A. ES was positively associated with PEOU ($\beta = .418$, $p < .001$), PU ($\beta = .203$, $p < .001$), BI ($\beta = .102$, $p = .038$), and AI-TPACK ($\beta = .238$, $p < .001$). PEOU was positively associated with PU ($\beta = .390$, $p < .001$), BI ($\beta = .350$, $p < .001$), and AI-TPACK ($\beta = .231$, $p < .001$). PU was positively associated with BI ($\beta = .215$, $p < .001$) and AI-TPACK ($\beta = .213$, $p < .001$), while BI was also positively associated with AI-TPACK ($\beta = .146$, $p = .007$). Gender was not significantly associated with AI-TPACK ($\beta = .001$, $p = .976$), whereas teaching years showed a small negative association ($\beta = -.099$, $p = .009$). The squared multiple correlations reported in Table 12, Panel B indicate that the structural model explained 17.4% of the variance in PEOU ($R^2 = .174$), 25.9% in PU ($R^2 = .259$), 29.7% in BI ($R^2 = .297$), and 39.9% in AI-TPACK ($R^2 = .399$).

Bootstrap estimates of direct, indirect, and total effects are reported in Table 13. For the ES → AI-TPACK relationship, the direct effect was supported [B = .308, 95% CI (.107,.461)], the total indirect effect was significant [B = .287, 95% CI (.203,.386)], and the total effect was B = .595, 95% CI [.365,.798]. Among the specific indirect effects, the ES → PEOU → AI-TPACK pathway was supported [B = .125, 95% CI (.052,.235)], as was ES → PU → AI-TPACK [B = .056, 95% CI (.012,.128)]. The BI-only pathway was not supported because its interval included zero [ES → BI → AI-TPACK: B = .019, 95% CI (−.001,.068)]. The serial pathways ES → PEOU → PU → AI-TPACK [B = .045, 95% CI (.022,.096)], ES → PEOU → BI → AI-TPACK [B = .028, 95% CI (.009,.056)], ES → PU → BI → AI-TPACK [B = .008, 95% CI (.001,.021)], and ES → PEOU → PU → BI → AI-TPACK [B = .007, 95% CI (.001,.017)] also had bootstrap intervals that excluded zero. Inference for the indirect effects is therefore based on the bootstrap confidence intervals.

TABLE 4 Total variance explained by the five-factor EFA solution.

Factor	Initial eigenvalues			Extraction sums of squared loadings		
	Total	Variance (%)	Cumulative (%)	Total	Variance (%)	Cumulative (%)
1	6.617	36.760	36.760	6.242	34.677	34.677
2	2.400	13.335	50.095	2.042	11.347	46.023
3	1.490	8.280	58.375	1.127	6.261	52.285
4	1.329	7.381	65.756	.953	5.293	57.578
5	1.205	6.693	72.449	.833	4.629	62.207

Extraction method: Principal Axis Factoring. Five factors were retained using the Kaiser criterion (initial eigenvalues > 1). The extracted five-factor solution accounted for 62.207% of the variance.

TABLE 5 Pattern matrix from exploratory factor analysis.

Construct	Item	Factor 1	Factor 2	Factor 3	Factor 4	Factor 5
ES	ES1	**.789**	−.019	−.011	.007	−.030
	ES2	**.756**	.007	−.037	−.004	.001
	ES3	**.781**	−.030	−.044	−.009	−.070
	ES4	**.800**	.016	−.017	−.008	.020
	ES5	**.812**	.063	.104	−.013	−.003
	ES6	**.823**	.002	−.021	−.008	.050
PU	PU1	−.048	−.006	**−.763**	−.067	−.081
	PU2	−.005	.043	**−.863**	.002	.087
	PU3	.055	.005	**−.722**	.029	−.050
PEOU	PEOU1	.005	−.003	−.047	.038	**−.748**
	PEOU2	.001	−.023	.031	.017	**−.885**
	PEOU3	.004	.098	−.011	−.119	**−.553**
BI	BI1	−.026	**.821**	−.014	−.008	−.002
	BI2	−.016	**.818**	−.026	.031	.007
	BI3	.152	**.585**	−.018	−.063	−.082
AI-TPACK	AI-TPACK1	−.092	.121	.040	**−.847**	.005
	AI-TPACK2	.125	−.076	−.066	**−.582**	−.027
	AI-TPACK3	.029	−.041	−.028	**−.767**	−.013

Extraction method: Principal Axis Factoring; rotation method: Promax with Kaiser normalization. Rotation converged in seven iterations. Primary loadings are shown in bold. Factor 1 = ES; Factor 2 = BI; Factor 3 = PU; Factor 4 = AI-TPACK; Factor 5 = PEOU. Factor signs reflect arbitrary orientation and do not affect substantive interpretation.

5 Discussion

5.1 The influence mechanism of ES on AI-TPACK literacy

ES showed a positive direct association with AI-TPACK after PEOU, PU, and BI were included in the structural model ($\beta = .238$, $p < .001$), supporting H1. This result is consistent with Fernández-Batanero et al. (2021), who emphasized that teachers' digital competence depends on sustained professional training, technological resources, and institutional support, rather than on individual effort alone. It also aligns with Shen et al. (2024), who showed that organizational support can facilitate teachers' technology integration by improving access to resources and strengthening their perceived capacity to use technology. Similarly, Wang and Zhao (2021) found that university ICT support was positively related to TPACK development, partly through teachers' technology-related self-efficacy. Taken together, these studies suggest that infrastructure, technical assistance, training, and organizational encouragement may help faculty connect AI tools with pedagogical strategies and disciplinary content.

5.2 Mediating effect of PEOU

The ES → PEOU → AI-TPACK specific indirect effect had a bootstrap confidence interval that excluded zero [B = .125, $\beta = .097$, 95% CI (.052,.235)], supporting H2 within the specified model. PEOU also had positive structural associations with PU, BI, and AI-TPACK. These findings are consistent with TAM-

based research in which perceived ease of use is related to technology acceptance and technology-related competence (Antonietti et al., 2022; Ke and Gong, 2025). Among the specific ES-to-AI-TPACK indirect effects, the PEOU-only pathway had the largest point estimate. This pattern is consistent with TAM, in which PEOU reflects the extent to which using a technology is perceived as requiring little effort and may shape technology acceptance both directly and through evaluations of usefulness (Davis, 1989). In AI-supported teaching, faculty who regard AI tools as intuitive, easy to learn, and manageable may face fewer cognitive and operational barriers to exploring their functions and connecting them with pedagogical and disciplinary needs. Zhang et al. (2025) similarly emphasized that user-friendly interfaces, low learning costs, accessible technical assistance, and reliable infrastructure can reduce operational complexity and support teachers' continued engagement with AI, although the effects of facilitating conditions may vary with users' prior digital familiarity. The present result therefore suggests that ES may be associated with AI-TPACK partly by making AI tools appear easier to learn and operate.

The result does not establish a one-way developmental process from PEOU to AI-TPACK. Faculty who already possess stronger AI-related knowledge may perceive AI tools as easier to use. Longitudinal or experimental evidence is needed to distinguish these directions. The present finding is therefore best understood as a robust statistical association and indirect-effect pattern within the hypothesized model.

TABLE 6 Fit indices for the confirmatory factor analysis model.

Fit Index	Value	Recommended Criterion	Evaluation
$\chi 2/df$	2.546	<3.00	Good
RMSEA	0.051	<.080	Good
SRMR	0.044	<.080	Good
CFI	0.964	>.900	Good
TLI	0.956	>.900	Good

5.3 Mediating effect of PU

The ES → PU → AI-TPACK indirect effect was supported by its bootstrap confidence interval [B = .056, β = .043, 95% CI (.012,.128)], supporting H3. In TAM, PU reflects the belief that using a technology can improve work performance and is therefore an important motivational basis for technology acceptance and continued engagement (Davis, 1989). Previous studies have similarly identified PU as a key correlate of

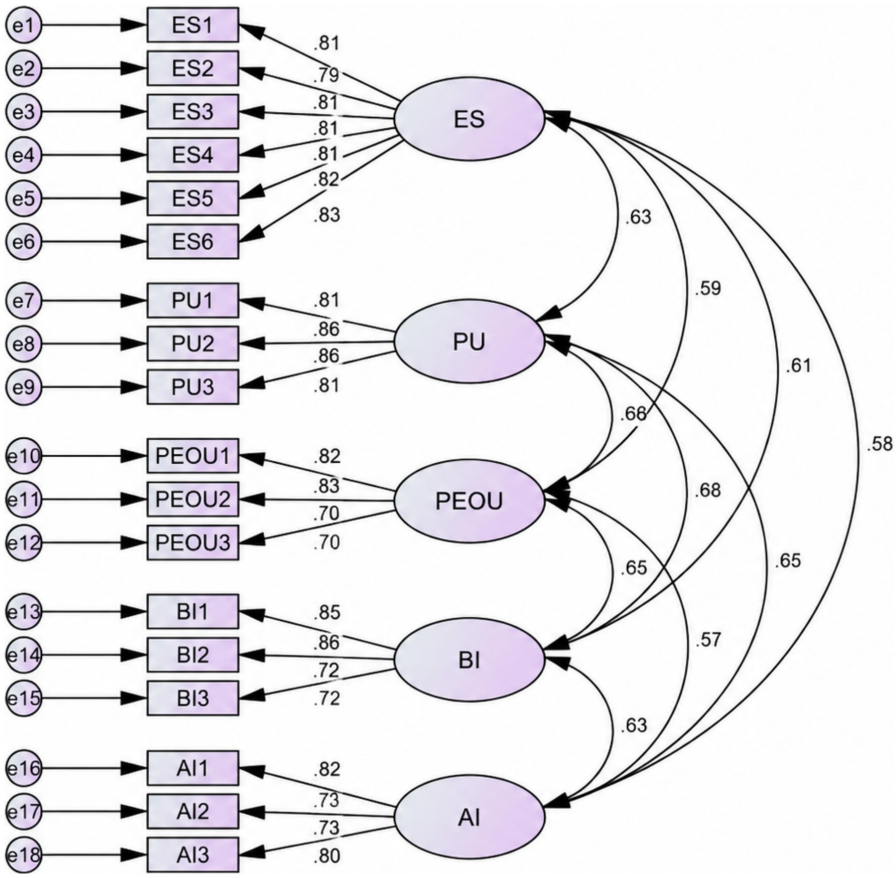

FIGURE 2
Confirmatory factor analysis of the five-factor measurement model. Standardized factor loadings and latent-factor correlations are shown. ES, external support; PU, perceived usefulness; PEOU, perceived ease of use; BI, behavioral intention to use AI; AI-TPACK, artificial intelligence-enhanced technological pedagogical content knowledge.

TABLE 7 Confirmatory factor analysis results, composite reliability, and average variance extracted.

Construct	Item	Standardized Loading	CR	AVE
ES	ES1	0.798	0.915	0.642
	ES2	0.775		
	ES3	0.821		
	ES4	0.806		
	ES5	0.793		
	ES6	0.812		
PU	PU1	0.826	0.841	0.638
	PU2	0.812		
	PU3	0.755		
PEOU	PEOU1	0.760	0.805	0.576
	PEOU2	0.822		
	PEOU3	0.683		
BI	BI1	0.816	0.821	0.600
	BI2	0.789		
	BI3	0.719		
AI-TPACK	AI-TPACK 1	0.808	0.800	0.568
	AI-TPACK 2	0.659		
	AI-TPACK 3	0.790		

ES, external support; PU, perceived usefulness; PEOU, perceived ease of use; BI, behavioral intention to use AI; AI-TPACK, artificial intelligence-enhanced technological pedagogical content knowledge.

TABLE 8 Discriminant validity: latent-variable correlations and square roots of AVE.

Construct	ES	PU	PEOU	BI	AI-TPACK
ES	0.801				
PU	0.366	0.799			
PEOU	0.418	0.475	0.759		
BI	0.327	0.419	0.495	0.775	
AI-TPACK	0.463	0.470	0.500	0.419	0.754

Diagonal values are square roots of AVE; off-diagonal values are latent-variable correlations. ES, external support; PU, perceived usefulness; PEOU, perceived ease of use; BI, behavioral intention to use AI; AI-TPACK, artificial intelligence-enhanced technological pedagogical content knowledge.

teachers' willingness to adopt AI tools and integrate technology into instruction (Hazzan-Bishara et al., 2025; Lu and Lin, 2025). Nelson and Hawk (2020) further suggested that teachers' evaluations of technological usefulness are related to the development of TPACK-related knowledge and practice, while Zhao (2026) reported a positive relationship between PU and AI-related TPACK in AI-supported learning contexts. Accordingly, when institutional support helps faculty recognize that AI can improve teaching efficiency, support personalized learning, or facilitate the monitoring of student progress, they may also report greater confidence in integrating AI with pedagogy and disciplinary content. The significant PEOU → PU path ($\beta = .390$, $p < .001$) is compatible with the TAM proposition that technologies perceived as easier to use may also be judged as more useful. However, the cross-sectional data cannot confirm that PEOU temporally preceded PU.

5.4 Mediating effect of BI

The specific ES → BI → AI-TPACK indirect effect was not statistically supported because its bootstrap interval included zero [B = .019, $\beta = .015$, 95% CI (−.001,.068)]; therefore, H4 was not supported. This result means only that the unique BI-only indirect association was not distinguishable from zero after the other mediators were modeled. In the structural model, the ES → BI path was positive ($\beta = .102$, $p = .038$), whereas the bootstrapped direct-effect estimate for ES → BI in the mediation decomposition had a confidence interval that included zero [B = .121, 95% CI (−.005,.275)]. BI itself was positively associated with AI-TPACK ($\beta = .146$, $p = .007$), and BI participated in several longer serial pathways whose bootstrap intervals excluded zero. Thus, BI appears to be one element of the broader pattern linking institutional support and technology-acceptance beliefs with perceived AI-TPACK, rather than an independently sufficient mediator.

5.5 Serial indirect associations of PEOU, PU, and BI

The full specified serial pathway ES → PEOU → PU → BI → AI-TPACK had a bootstrap confidence interval that excluded zero [B = .007, $\beta = .005$, 95% CI (.001,.017)]; under the pre-specified bootstrap-CI criterion, this provides statistical support for H5. Additional serial paths also had intervals excluding zero, including ES → PEOU → PU → AI-TPACK [B = .045, 95% CI (.022,.096)], ES → PEOU → BI → AI-TPACK [B = .028, 95% CI (.009,.056)], and ES → PU → BI → AI-TPACK [B = .008, 95% CI (.001,.021)]. These estimates indicate that serial pathways contribute incrementally to the overall indirect association, although the magnitudes are relatively small. The contribution of the model is therefore to show that ES, PEOU, PU, BI, and AI-TPACK are psychometrically distinguishable and statistically connected through multiple direct and indirect paths in the same structural framework.

5.6 Comparison with international evidence

The findings also show both convergence with and variation from international evidence. In a Swiss vocational-education sample, Antonietti et al. (2022) found that TAM explained teachers' intention to use technology and that perceived usefulness was especially important, whereas the present study yielded the largest estimated ES-to-AI-TPACK specific indirect effect through PEOU alone. In Saudi higher education, Al-Abdullatif (2024) likewise identified perceived ease of use as a

TABLE 9 Descriptive statistics and correlations among variables.

Variable	M	SD	1	2	3	4
1.ES	3.41	0.95				
2.PU	3.71	0.92	0.408**			
3.PEOU	3.63	0.86	0.468**	0.392**		
4.BI	3.56	1.03	0.392**	0.388**	0.263**	
5.AI-TPACK	3.51	0.89	0.558**	0.392**	0.376**	0.300**

ES, external support; PU, perceived usefulness; PEOU, perceived ease of use; BI, behavioral intention to use AI; AI-TPACK, artificial intelligence-enhanced technological pedagogical content knowledge.
**$p < 0.01$.

TABLE 10 Observed score ranges and descriptive statistics.

Variable	*N*	Minimum	Maximum	Mean	SD
ES	593	1.00	4.83	3.409	0.951
PU	593	1.33	5.00	3.710	0.919
PEOU	593	1.00	5.00	3.633	0.858
BI	593	1.00	5.00	3.558	1.030
AI-TPACK	593	1.33	5.00	3.505	0.893

ES, external support; PU, perceived usefulness; PEOU, perceived ease of use; BI, behavioral intention to use AI; AI-TPACK, artificial intelligence-enhanced technological pedagogical content knowledge.

TABLE 11 Goodness-of-fit indices for the structural equation model.

Fit Index	Value	Recommended Criterion	Evaluation
$\chi 2$	371.704	-	-
df	159	-	-
$\chi 2/df$	2.338	<3.00	Good
RMSEA	0.047	<.080	Good
SRMR	0.047	<.080	Good
CFI	0.961	>.900	Good
TLI	0.953	>.900	Good

strong correlate of generative-AI acceptance and showed that intelligent TPACK was closely connected with acceptance-related beliefs. At a broader level, Scherer et al. (2019) synthesized 114 empirical teacher-TAM studies and concluded that TAM provides a useful account of teachers' technology adoption while the relative role of particular constructs and external variables varies across studies. Taken together, the present Chinese findings are consistent with international evidence on the centrality of ease-of-use and usefulness beliefs, but the relative strength and ordering of these associations should not be assumed to be universal across educational systems, technologies, or teacher populations.

6 Practical implications

The findings of this study carry several practical implications for supporting university faculty's development of AI-TPACK. In particular, the results point to four interconnected areas of institutional practice: strengthening access to AI-related support, reducing barriers to learning and operating AI tools, making their instructional value more visible, and creating conditions that support faculty's intention to engage with AI in teaching.

6.1 Improving access to institutional AI support

The positive direct association between ES and AI-TPACK ($\beta = .238$, $p < .001$) suggests that faculty development should be supported not only at the individual level but also through an enabling institutional environment. Previous research has consistently emphasized that teachers' technology integration is shaped by contextual conditions such as access to technological resources, professional development, technical assistance, and organizational support (Ertmer, 1999; Venkatesh and Davis, 2000). More recent work on AI-related teacher professional development similarly indicates that effective programs need to connect technological learning with pedagogical knowledge and provide sustained opportunities for teachers to develop AI-related professional competence (Dogan et al., 2025). Accordingly, universities may review whether AI-related infrastructure, training opportunities, technical assistance, and pedagogical resources are sufficiently visible, accessible, and responsive to faculty members' actual teaching needs. Rather than simply increasing the quantity of available resources, institutional support may be more useful when it is closely aligned with concrete instructional tasks and accompanied by continuing guidance.

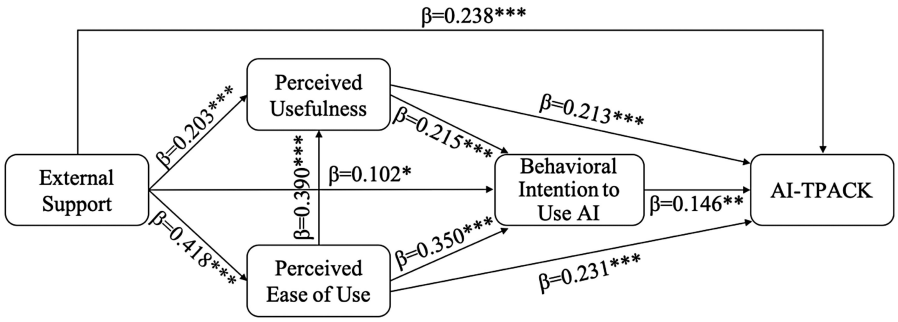

FIGURE 3
Standardized structural model of ES, PEOU, PU, BI, and AI-TPACK. Standardized coefficients are shown. * $p < .05$, ** $p < .01$, *** $p < .001$. Gender and teaching years were included as controls on AI-TPACK but are omitted from the figure for clarity.

TABLE 12 Structural path coefficients and squared multiple correlations.

Panel A. Structural path coefficients						
Path	B	*β*	SE(*β*)	z	*p*	Result
ES → PEOU	0.460	.418	.041	10.253	<.001	Significant
ES → PU	0.236	.203	.047	4.277	<.001	Significant
PEOU → PU	0.412	.390	.048	8.066	<.001	Significant
ES → BI	0.121	.102	.049	2.077	.038	Significant
PU → BI	0.221	.215	.053	4.090	<.001	Significant
PEOU → BI	0.380	.350	.054	6.431	<.001	Significant
ES → AI-TPACK	0.308	.238	.046	5.133	<.001	Significant
PU → AI-TPACK	0.237	.213	.052	4.124	<.001	Significant
PEOU → AI-TPACK	0.271	.231	.057	4.039	<.001	Significant
BI → AI-TPACK	0.159	.146	.054	2.720	.007	Significant
Gender → AI-TPACK	0.003	0.001	0.039	0.031	0.976	Not significant
Teaching Years → AI-TPACK	−0.185	−0.099	0.038	−2.604	0.009	Significant

Panel B. Squared multiple correlations	
Endogenous construct	R2
PEOU	0.174
PU	0.259
BI	0.297
AI-TPACK	0.399

B = unstandardized coefficient; β = standardized coefficient; SE(β) = standard error associated with β; z = β/SE(β). The z statistics were calculated using the unrounded β and SE(β) values; therefore, minor discrepancies may arise when z is recalculated from the rounded values displayed in the table. R^2 = squared multiple correlation, representing the proportion of variance explained in each endogenous construct. ES, external support; PU, perceived usefulness; PEOU, perceived ease of use; BI, behavioral intention to use AI; AI-TPACK, artificial intelligence-enhanced technological pedagogical content knowledge. Gender and teaching years were included as covariates predicting AI-TPACK.

6.2 Reducing the difficulty of learning and operating AI tools

PEOU was positively associated with PU, BI, and AI-TPACK, and the PEOU-only indirect pathway from ES to AI-TPACK had the largest point estimate [B = .125, 95% CI (.052,.235)]. Although this does not establish PEOU as a statistically superior or causal mechanism, it highlights the practical importance of faculty members' perceptions of the effort required to learn and operate AI tools. Within TAM, PEOU is conceptualized as an important belief shaping technology acceptance (Davis, 1989), and empirical research with teachers has similarly shown that technology-acceptance beliefs are closely related to teachers' intentions to use digital technologies (Antonietti et al., 2022). Universities may therefore reduce unnecessary operational barriers by providing user-friendly platforms, task-oriented demonstrations, step-by-step guidance, accessible troubleshooting services, and opportunities for guided hands-on

TABLE 13 Direct, indirect, and total effects in the mediation analysis.

Mediation Effect	Effect Type	Specific Path	B	SE	β	95% Bootstrap CI
ES → PU	Direct Effect	ES → PU	0.236	0.070	0.203	[.070,.387]
	Indirect Effect	ES → PEOU → PU	0.189	0.045	0.163	[.141,.325]
	Total Effect	ES → PU	0.425	0.059	0.366	[.326,.568]
PEOU → BI	Direct Effect	PEOU → BI	0.380	0.108	0.350	[.143,.615]
	Indirect Effect	PEOU → PU → BI	0.091	0.042	0.084	[.013,.229]
	Total Effect	PEOU → BI	0.471	0.092	0.434	[.297,.705]
ES → BI	Direct Effect	ES → BI	0.121	0.068	0.102	[−.005,.275]
	Indirect Effect	ES → PU → BI	0.052	0.025	0.044	[.005,.106]
	Indirect Effect	ES → PEOU → BI	0.174	0.050	0.146	[.068,.277]
	Indirect Effect	ES → PEOU → PU → BI	0.042	0.021	0.035	[.006,.116]
	Total Indirect Effect	All indirect paths	0.268	0.043	0.225	[.193,.364]
	Total Effect	ES → BI	0.390	0.071	0.327	[.253,.559]
PU → AI-TPACK	Direct Effect	PU → AI-TPACK	0.237	0.073	0.213	[.087,.398]
	Indirect Effect	PU → BI → AI-TPACK	0.035	0.017	0.032	[.005,.077]
	Total Effect	PU → AI-TPACK	0.272	0.071	0.245	[.127,.424]
PEOU → AI-TPACK	Direct Effect	PEOU → AI-TPACK	0.271	0.078	0.231	[.116,.473]
	Indirect Effect	PEOU → PU → AI-TPACK	0.097	0.036	0.083	[.041,.191]
	Indirect Effect	PEOU → BI → AI-TPACK	0.060	0.025	0.051	[.018,.118]
	Indirect Effect	PEOU → PU → BI → AI-TPACK	0.014	0.007	0.012	[.002,.035]
	Total Indirect Effect	All indirect paths	0.172	0.037	0.147	[.109,.268]
	Total Effect	PEOU → AI-TPACK	0.443	0.079	0.378	[.307,.674]
ES → AI-TPACK	Direct Effect	ES → AI-TPACK	0.308	0.081	0.238	[.107,.461]
	Indirect Effect	ES → PEOU → AI-TPACK	0.125	0.043	0.097	[.052,.235]
	Indirect Effect	ES → PU → AI-TPACK	0.056	0.026	0.043	[.012,.128]
	Indirect Effect	ES → BI → AI-TPACK	0.019	0.017	0.015	[−.001,.068]
	Indirect Effect	ES → PEOU → PU → AI-TPACK	0.045	0.018	0.035	[.022,.096]
	Indirect Effect	ES → PEOU → BI → AI-TPACK	0.028	0.012	0.021	[.009,.056]
	Indirect Effect	ES → PU → BI → AI-TPACK	0.008	0.005	0.006	[.001,.021]
	Indirect Effect	ES → PEOU → PU → BI → AI-TPACK	0.007	0.004	0.005	[.001,.017]
	Total Indirect Effect	All indirect paths	0.287	0.049	0.222	[.203,.386]
	Total Effect	ES → AI-TPACK	0.595	0.093	0.461	[.365,.798]

$N = 593$. Statistical inference for the direct, indirect, and total effects reported in this table is based on 95% bootstrap confidence intervals. An effect was considered statistically supported when the confidence interval did not include zero. B = unstandardized effect; β = standardized effect. ES, external support; PU, perceived usefulness; PEOU, perceived ease of use; BI, behavioral intention to use AI; AI-TPACK, artificial intelligence-enhanced technological pedagogical content knowledge.

practice. Such support may enable faculty to devote greater attention to pedagogical design rather than to basic technical operation.

6.3 Making the instructional value of AI concrete

PU was positively associated with BI ($\beta = .215$, $p < .001$) and AI-TPACK ($\beta = .213$, $p < .001$), and the ES → PU → AI-TPACK indirect pathway was supported [B = .056, 95% CI (.012,.128)]. These findings indicate that faculty development should extend beyond teaching teachers how to operate AI tools and should also help them evaluate what those tools can meaningfully contribute to teaching and learning. Research grounded in TPACK has emphasized that effective technology integration depends on connecting technological knowledge with pedagogical and disciplinary knowledge rather than treating technology as an isolated skill (Mishra and Koehler, 2006). In the context of AI, Celik (2023) similarly highlighted the importance of combining technological and pedagogical knowledge when teachers use AI-based tools. Universities could therefore incorporate discipline-specific cases, authentic instructional problems, and demonstrations of AI-supported lesson planning, feedback, assessment, or learning support into faculty development. Such examples may help faculty move

from an abstract perception that AI is useful toward a contextualized judgment of when and for what pedagogical purposes it adds instructional value.

6.4 Supporting behavioral intention to engage with AI

BI was positively associated with AI-TPACK ($\beta = .146$, $p = .007$), but the BI-only indirect pathway from ES to AI-TPACK was not supported [B = .019, 95% CI (−.001,.068)]. This combination of findings suggests that intention should not be treated as a stand-alone mechanism through which generic institutional support automatically produces AI-TPACK development. Rather, willingness to engage appears more meaningful when considered alongside faculty members' perceptions of usability and instructional value, as reflected in the longer serial pathways. Prior TAM research treats behavioral intention as a proximal indicator of willingness to use technology (Davis, 1989; Venkatesh et al., 2003), but the present study did not measure actual classroom behavior. Institutions may therefore create supportive, low-risk opportunities for faculty to explore AI applications, exchange experiences with colleagues, evaluate the strengths and limitations of different tools, and reflect on whether continued use is pedagogically appropriate. Such opportunities may strengthen willingness to engage while preserving professional judgment about when AI should or should not be used.

7 Conclusion

This study examined a theory-guided structural model linking ES, PEOU, PU, BI, and university faculty's AI-TPACK. Measurement analyses supported a distinguishable five-factor structure, and the structural model showed acceptable fit. ES retained a positive direct association with AI-TPACK ($\beta = .238$, $p < .001$), while the total indirect effect through the specified mediators was also supported [B = .287, 95% CI (.203,.386)]; the total ES-to-AI-TPACK effect was B = .595, 95% CI [.365,.798]. The PEOU-only specific indirect effect had the largest point estimate (B = .125), whereas the BI-only indirect effect was not supported. The full serial pathway through PEOU, PU, and BI was small but had a bootstrap confidence interval excluding zero [B = .007, 95% CI (.001,.017)]. These findings refine the integration of TAM and AI-TPACK by showing how external support and technology-acceptance variables can be examined jointly. Practically, the results support improving access to institutional AI support, reducing perceived barriers to learning and operating AI tools, making their instructional value concrete, and providing appropriate opportunities for faculty to engage with AI.

8 Limitations

Several limitations qualify the findings. First, the cross-sectional design does not establish temporal precedence or causal direction. Reverse or reciprocal relationships are plausible; for example, faculty with stronger prior AI-TPACK may perceive AI tools as easier to use or more useful. Longitudinal, cross-lagged, or experimental designs are needed to test developmental ordering. Second, participants were recruited through a digital literacy enhancement program and an AI education case initiative, creating a possible self-selection bias because these faculty may have had greater prior interest in AI or access to institutional support. The sample also overrepresented social-science faculty, which limits generalizability across disciplines, regions, and institution types. Third, all focal variables were measured from the same respondents using self-report questionnaires. The AI-TPACK outcome therefore represents perceived competence rather than performance demonstrated through knowledge tests, observations, or teaching tasks, and the design remains susceptible to common method and social-desirability bias despite the measurement analyses. Fourth, BI captures stated willingness to engage with AI rather than actual classroom use. Future research should combine self-report measures with behavioral indicators, classroom observations, or task-based assessments and should test alternative or reciprocal structural models across cultural contexts. Because the sample was drawn from universities in a single Chinese province, institutional arrangements, professional-development structures, and norms surrounding AI use may differ across educational systems; cross-cultural replication and measurement-invariance testing are therefore needed before assuming that the observed relationships generalize internationally.

Data availability statement

Publicly available datasets were analyzed in this study. This data can be found here: https://osf.io/racjz/overview?view_only=be011cd0cfc840f7a88d64563ca7977b.

Ethics statement

The studies involving humans were approved by the Academic Ethics Committee of Normal School of Vocational Techniques, Hubei University of Technology. The studies were conducted in accordance with the local legislation and institutional requirements. The participants provided their written informed consent to participate in this study.

Author contributions

MW: Conceptualization, Supervision, Writing – review & editing. BX: Data curation, Formal analysis, Writing – original draft. SZ: Data curation, Investigation, Methodology, Writing – original draft.

Funding

The author(s) declared that financial support was received for this work and/or its publication. This work was supported by the 2025 Undergraduate Teaching Research Project of Hubei University of Technology (2025XZ26).

Conflict of interest

The author(s) declared that this work was conducted in the absence of any commercial or financial relationships that could be construed as a potential conflict of interest.

Generative AI statement

The author(s) declared that generative AI was not used in the creation of this manuscript.

Any alternative text (alt text) provided alongside figures in this article has been generated by Frontiers with the support of artificial intelligence and reasonable efforts have been made to ensure accuracy, including review by the authors wherever possible. If you identify any issues, please contact us.

Publisher's note

All claims expressed in this article are solely those of the authors and do not necessarily represent those of their affiliated organizations, or those of the publisher, the editors and the reviewers. Any product that may be evaluated in this article, or claim that may be made by its manufacturer, is not guaranteed or endorsed by the publisher.

Supplementary material

The Supplementary Material for this article can be found online at: https://www.frontiersin.org/articles/10.3389/feduc.2026.1923624/full#supplementary-material

References

Ajayi, A. (2024). AI Integration in STEM curriculum: a conceptual model for deepening student engagement and learning. *Int. J. Adv. Multidiscip. Res. Stud.* 4 (6), 1645–1654. doi: 10.62225/2583049X.2024.4.6.4076

Al-Abdullatif, A. M. (2024). Modeling teachers' acceptance of generative artificial intelligence use in higher education: the role of AI literacy, intelligent TPACK, and perceived trust. *Educ. Sci.* 14 (11), 1209. doi: 10.3390/educsci14111209

Al-Adwan, A. S., Meet, R. K., Anand, S., Shukla, G. P., Alsharif, R., and Dabbaghia, M. (2025). Understanding continuous use intention of technology among higher education teachers in emerging economy: evidence from integrated TAM, TPACK, and UTAUT model. *Stud. High. Educ.* 50 (3), 505–524. doi: 10.1080/03075079.2024.2343955

Al-Senaidi, S., Lin, L., and Poirot, J. (2009). Barriers to adopting technology for teaching and learning in Oman. *Comput. Educ.* 53 (3), 575–590. doi: 10.1016/j.compedu.2009.03.015

An, X., Chai, C. S., Li, Y., Zhou, Y., Shen, X., Zheng, C., et al. (2023). Modeling English teachers' behavioral intention to use artificial intelligence in middle schools. *Educ. Inf. Technol.* 28, 5187–5208. doi: 10.1007/s10639-022-11286-z

Antonietti, C., Cattaneo, A., and Amenduni, F. (2022). Can teachers' digital competence influence technology acceptance in vocational education? *Comput. Human. Behav.* 132, 107266. doi: 10.1016/j.chb.2022.107266

Bond, M., Marín, V. I., Dolch, C., Bedenlier, S., and Zawacki-Richter, O. (2018). Digital transformation in German higher education: student and teacher perceptions and usage of digital media. *Int. J. Educ. Technol. High. Educ.* 15 (1), 48. doi: 10.1186/s41239-018-0130-1

Celik, I. (2023). Towards intelligent-TPACK: an empirical study on teachers' professional knowledge to ethically integrate artificial intelligence (AI)-based tools into education. *Comput. Human. Behav.* 138, 107468. doi: 10.1016/j.chb.2022.107468

Chiu, T. K. (2022). School learning support for teacher technology integration from a self-determination theory perspective. *Educ. Technol. Res. Dev.* 70 (3), 931–949. doi: 10.1007/s11423-022-10096-x

Chiu, T. K. (2026). Intelligent-TPACK (I-TPACK) framework developed from TPACK through integration of artificial intelligence literacy and competency. *Interact. Learn. Environ.* 1, 1–16. doi: 10.1080/10494820.2026.2615818

Davis, F. D. (1989). Perceived usefulness, perceived ease of use, and user acceptance of information technology. *MIS. Q.* 13 (3), 319–340. doi: 10.2307/249008

Dogan, S., Nalbantoglu, U. Y., Celik, I., and Agacli Dogan, N. (2025). Artificial intelligence professional development: a systematic review of TPACK, designs, and effects for teacher learning. *Prof. Dev. Educ.* 51 (3), 519–546. doi: 10.1080/19415257.2025.2454457

Ertmer, P. A. (1999). Addressing first-and second-order barriers to change: strategies for technology integration. *Educ. Technol. Res. Dev.* 47 (4), 47–61. doi: 10.1007/BF02299597

Fernández-Batanero, J. M., Román-Graván, P., Montenegro-Rueda, M., López-Meneses, E., and Fernández-Cerero, J. (2021). Digital teaching competence in higher education: a systematic review. *Educ. Sci.* 11 (11), 689. doi: 10.3390/educsci11110689

Hava, K., and Babayiğit, Ö (2025). Exploring the relationship between teachers' competencies in AI-TPACK and digital proficiency. *Educ. Inf. Technol.* 30 (3), 3491–3508. doi: 10.1007/s10639-024-12939-x

Hazzan-Bishara, A., Kol, O., and Levy, S. (2025). The factors affecting teachers' adoption of AI technologies: a unified model of external and internal determinants. *Educ. Inf. Technol.* 30 (11), 15043–15069. doi: 10.1007/s10639-025-13393-z

Henderson, M., Selwyn, N., and Aston, R. (2017). What works and why? Student perceptions of 'useful' digital technology in university teaching and learning. *Stud. High. Educ.* 42 (8), 1567–1579. doi: 10.1080/03075079.2015.1007946

Ke, Q., and Gong, Y. (2025). Linking TPACK to teacher self-efficacy in EFL teacher education: mediating roles of perceived usefulness and perceived ease of use. *J. Res. Technol. Educ.*, 1–24. doi: 10.1080/15391523.2025.2568514

Kirkwood, A., and Price, L. (2014). Technology-enhanced learning and teaching in higher education: what is 'enhanced' and how do we know? A critical literature review. *Learn. Media. Technol.* 39 (1), 6–36. doi: 10.1080/17439884.2013.770404

Koehler, M., and Mishra, P. (2009). What is technological pedagogical content knowledge (TPACK)? *CITE.* 9 (1), 60–70. Available online at: https://www.learntechlib.org/p/29544/ (Accessed August 19, 2026).

Kong, S. C., Yang, Y., and Hou, C. (2024). Examining teachers' behavioural intention of using generative artificial intelligence tools for teaching and learning based on the extended technology acceptance model. *Comput. Educ.: Artif. Intell.* 7, 100328. doi: 10.1016/j.caeai.2024.100328

Lai, C., and Shi, Z. (2025). Teachers' digital initiatives to bridge students' in-class and out-of-class language learning and the influencing factors. *Br. J. Educ. Technol.* 56 (6), 2595–2622. doi: 10.1111/bjet.13595

Lai, C., Wang, Q., and Huang, X. (2022). The differential interplay of TPACK, teacher beliefs, school culture and professional development with the nature of in-service EFL teachers' technology adoption. *Br. J. Educ. Technol.* 53 (5), 1389–1411. doi: 10.1111/bjet.13200

Lu, W., and Lin, C. (2025). Meta-analysis of influencing factors on the use of artificial intelligence in education. *Asia-Pac. Educ. Res.* 34 (2), 617–627. doi: 10.1007/s40299-024-00883-w

Mishra, P., and Koehler, M. J. (2006). Technological pedagogical content knowledge: a framework for teacher knowledge. *Teach. Coll. Rec.* 108 (6), 1017–1054. doi: 10.1111/j.1467-9620.2006.00684.x

Molefi, R. R., Ayanwale, M. A., Kurata, L., and Chere-Masopha, J. (2024). Do in-service teachers accept artificial intelligence-driven technology? The mediating role

of school support and resources. *Comput. Educ. Open* 6, 100191. doi: 10.1016/j.caeo.2024.100191

Nelson, M. J., and Hawk, N. A. (2020). The impact of field experiences on prospective preservice teachers' technology integration beliefs and intentions. *Teach. Teach. Educ.* 89, 103006. doi: 10.1016/j.tate.2019.103006

Ofem, U. J., Orim, F. S., Edam-Agbor, I. B., Amanso, E. O. I., Eni, E., Ukatu, J. O., et al. (2025). Teachers' preparedness for the utilization of artificial intelligence in classroom assessment: the contributory effects of attitude toward technology, technological readiness, and pedagogical beliefs with perceived ease of use and perceived usefulness as mediators. *Front. Educ.* 10, 1568306. doi: 10.3389/feduc.2025.1568306

Or, C. (2024). Watch that attitude! Examining the role of attitude in the technology acceptance model through meta-analytic structural equation modelling. *Int. J. Technol. Educ. Sci.* 8 (4), 558–582. doi: 10.46328/ijtes.575

Rutherford-Quach, S., Thompson, K. D., Rodriguez-Mojica, C., and Román, D. (2021). Taking away excuses to quit: the role of supports in completion and learning in online professional development for teachers. *Online Learn.* 25 (2), 140–170. doi: 10.24059/olj.v25i2.1586

Scherer, R., Siddiq, F., and Tondeur, J. (2019). The technology acceptance model (TAM): a meta-analytic structural equation modeling approach to explaining teachers' adoption of digital technology in education. *Comput. Educ.* 128, 13–35. doi: 10.1016/j.compedu.2018.09.009

Scherer, R., Tondeur, J., Siddiq, F., and Baran, E. (2018). The importance of attitudes toward technology for pre-service teachers' technological, pedagogical, and content knowledge: comparing structural equation modeling approaches. *Comput. Human. Behav.* 80, 67–80. doi: 10.1016/j.chb.2017.11.003

Schmidt, D. A., Baran, E., Thompson, A. D., Mishra, P., Koehler, M. J., and Shin, T. S. (2009). Technological pedagogical content knowledge (TPACK): the development and validation of an assessment instrument for preservice teachers. *J. Res. Technol. Educ.* 42 (2), 123–149. doi: 10.1080/15391523.2009.10782544

Shen, W., Lin, X. F., Chiu, T. K., Chen, X., Xie, S., Chen, R., et al. (2024). How school support and teacher perception affect teachers' technology integration: a multilevel mediation model analysis. *Educ. Inf. Technol.* 29 (18), 25069–25091. doi: 10.1007/s10639-024-12802-z

Shulman, L. (1987). Knowledge and teaching: foundations of the new reform. *Harv. Educ. Rev.* 57 (1), 1–23. doi: 10.17763/haer.57.1.j463w79r56455411

Theodorio, A. O. (2024). Examining the support required by educators for successful technology integration in teacher professional development program. *Cogent Educ.* 11 (1), 2298607. doi: 10.1080/2331186x.2023.2298607

Trapitsyn, S., and Tursynbaeva, A. (2025). Formation of information competence in future teachers based on the integration of artificial intelligence technologies in education. *Pedagog. Psychol.* 64 (3), 102–111. doi: 10.51889/2960-1649.2025.64.3.010

Venkatesh, V., and Davis, F. D. (2000). A theoretical extension of the technology acceptance model: four longitudinal field studies. *Manage. Sci.* 46 (2), 186–204. doi: 10.1287/mnsc.46.2.186.11926

Venkatesh, V., Morris, M. G., Davis, G. B., and Davis, F. D. (2003). User acceptance of information technology: toward a unified view. *MIS. Q.* 27 (3), 425–478. doi: 10.2307/30036540

Wang, Q., and Zhao, G. (2021). ICT Self-efficacy mediates most effects of university ICT support on preservice teachers' TPACK: evidence from three normal universities in China. *Br. J. Educ. Technol.* 52 (6), 2319–2339. doi: 10.1111/bjet.13141

Willermark, S. (2018). Technological pedagogical and content knowledge: a review of empirical studies published from 2011 to 2016. *J. Educ. Comput. Res.* 56 (3), 315–343. doi: 10.1177/0735633117713114

Yue, M., Jong, M. S. Y., and Ng, D. T. K. (2024). Understanding K-12 teachers' technological pedagogical content knowledge readiness and attitudes toward artificial intelligence education. *Educ. Inf. Technol.* 29 (15), 19505–19536. doi: 10.1007/s10639-024-12621-2

Zhang, N., Wong, W. L., and Barrot, J. (2025). Primary teachers' acceptance and sustained adoption of AI powered learner corpora for writing instruction through TAM and ECM perspectives. *Sci. Rep.* 15 (1), 37399. doi: 10.1038/s41598-025-21205-0

Zhao, J. (2026). Can AI literacy empower future educators? Unpacking its dual role in transforming deep learning into TPACK competence within blended classrooms. *Curr. Psychol.* 45 (4), 347. doi: 10.1007/s12144-025-08631-z

Zhu, Z., Gan, Q., and Duan, P. (2026). Art and design teachers' acceptance of AI-generated content for assisted tutoring: an extended TAM-TPACK framework. *Humanit. Soc. Sci. Commun.* 13 (1), 362. doi: 10.1057/s41599-026-06692-4