Higher Education Studies; Vol. 16, No. 4; 2026
ISSN 1925-4741 E-ISSN 1925-475X
Published by Canadian Center of Science and Education

Predicting Teachers' Behavioral Intention to Adopt Generative AI in Teaching: An Integrated TAM-UTAUT Regression Model

Xu Chengjun[1], Thada Jantakoon[1] & Rukthin Laoha[1]

[1] Department of Information and Communication Technology for Education, Faculty of Science and Technology, Rajabhat Maha Sarakham University, Thailand

Correspondence: Xu Chengjun, Department of Information and Communication Technology for Education, Faculty of Science and Technology, Rajabhat Maha Sarakham University, Thailand.

Received: July 27, 2026 Accepted: August 31, 2026 Online Published: September 1, 2026

doi:10.5539/hes.v16n4p146 URL: https://doi.org/10.5539/hes.v16n4p146

Abstract

Generative artificial intelligence (GenAI) has entered classrooms faster than most institutions have been able to formulate policy, yet its instructional value ultimately depends on whether teachers choose to use it. This study examined the determinants of teachers' behavioral intention (BI) to use GenAI in teaching, drawing on an integrated Technology Acceptance Model (TAM) and Unified Theory of Acceptance and Use of Technology (UTAUT) framework. Five predictors were specified: perceived ease of use (PEoU), perceived usefulness (PU), social influence (SI), facilitating conditions (FC), and anxiety (ANX). A cross-sectional survey was administered to 500 in-service teachers drawn from three Chinese educational institutions spanning medical higher education, vocational higher education, and primary education. Each construct was operationalized as a composite mean of its constituent items, and the model was estimated using the Regression module of SmartPLS 4 with bootstrapping (5,000 subsamples) to obtain confidence intervals. Collinearity diagnostics were acceptable (VIF = 1.046-1.238). The model accounted for 32.7% of the variance in behavioral intention (adjusted R^2 = .320). Perceived usefulness was the strongest predictor (β = .228, $p < .001$), followed by facilitating conditions (β = .206, $p < .001$), perceived ease of use (β = .198, $p < .001$), and social influence (β = .195, $p < .001$). Contrary to expectations, anxiety exerted no significant effect (β = .018, p = .631), with a bootstrap confidence interval that spanned zero. The findings indicate that teachers' adoption decisions are jointly driven by instrumental value and institutional provisioning, and that generalized technology anxiety is not, in itself, a barrier among teachers who already have practical exposure to GenAI. Implications for professional development design and institutional AI policy are discussed.

Keywords: generative artificial intelligence, teacher technology adoption, behavioral intention, Technology Acceptance Model, UTAUT, multiple regression

1. Introduction

The public release of large language model applications in late 2022 marked an inflection point for educational technology. Unlike earlier waves of digital innovation, which typically entered schools through procurement decisions made by administrators, generative artificial intelligence (GenAI) arrived directly in the hands of individual teachers and students, often ahead of any institutional guidance (Chiu, 2023; Lim et al., 2023). GenAI refers to a class of deep learning systems capable of generating novel text, images, code, and multimedia in response to natural-language prompts. In instructional contexts, these capabilities translate into concrete affordances: drafting lesson plans, differentiating reading materials, generating formative assessment items, producing worked examples, and providing preliminary feedback on student work. The speed of diffusion has been extraordinary, and international bodies have responded by urging governments to establish regulatory and pedagogical frameworks before, rather than after, widespread classroom integration (UNESCO, 2023).

Whether these affordances translate into improved learning, however, is not determined by the technology itself. Teachers are the decisive intermediary. Curricular reforms and technology initiatives that lack teacher endorsement rarely survive contact with everyday classroom practice, and a substantial body of evidence confirms that teacher acceptance is a necessary precondition for meaningful technology integration (Kong et al., 2024; Al Darayseh, 2023). Understanding what shapes teachers' willingness to adopt GenAI is therefore not merely an academic exercise; it is a prerequisite for the design of professional development programs,

institutional support structures, and AI governance policies that stand any chance of being adopted in practice.

Research on this question has accumulated rapidly, and the dominant theoretical lenses have been the Technology Acceptance Model (TAM; Davis, 1989) and the Unified Theory of Acceptance and Use of Technology (UTAUT; Venkatesh et al., 2003). Studies have documented the influence of perceived usefulness and self-efficacy among Hong Kong school teachers (Kong et al., 2024), of AI literacy, intelligent TPACK, and perceived trust among university faculty (Al-Abdullatif, 2024), of social influence and habit among pre-service teachers preparing lesson plans (Acquah et al., 2024), and of performance expectancy, effort expectancy, and social influence across large samples of Austrian students and teachers (Kinskofer & Tulis, 2025). Yet three gaps remain.

First, the empirical base is skewed toward pre-service teachers and university faculty. Pre-service teachers are convenient to sample and are frequently studied (Wang et al., 2024; Liu et al., 2025; He & Ren, 2025), but they operate under the supervisory constraints of teacher preparation programs rather than the accountability pressures, workload realities, and institutional resource conditions that govern in-service practice. Studies that sample in-service teachers across markedly different educational levels within a single design remain comparatively scarce.

Second, the role of anxiety as an inhibiting factor is unresolved. Anxiety has long been theorized as a determinant of technology use, both directly and through its effect on perceived ease of use (Compeau & Higgins, 1995; Venkatesh, 2000), and dedicated instruments for AI-specific anxiety have since been developed (Wang & Wang, 2022). Empirical findings, however, diverge sharply. GenAI anxiety significantly predicted pre-service teachers' intention to design AI-assisted instruction in one study (Wang et al., 2024), whereas a study of Spanish faculty found that only anxiety concerning harm to student learning exerted a significant negative effect, with other anxiety dimensions proving inert (Verano-Tacoronte et al., 2025). This inconsistency suggests that anxiety may be neither uniformly nor unconditionally inhibitory, and that its effect may depend on how it is conceptualized and, on the users', accumulated experience.

Third, the treatment of facilitating conditions is similarly inconsistent. Some studies report significant positive effects (Acquah et al., 2024), others find no effect on pre-service teachers' intentions (Wang et al., 2024), and at least one reports an unexpected negative association among university lecturers. Because facilitating conditions are the construct most directly amenable to institutional intervention, resolving their status has clear practical consequences.

The present study addresses these gaps by examining an integrated TAM-UTAUT model among 500 in-service teachers drawn from three Chinese institutions representing medical higher education, vocational higher education, and primary education. Five predictors perceived ease of use, perceived usefulness, social influence, facilitating conditions, and anxiety are examined in relation to behavioral intention. Consistent with the study's explanatory and predictive aims, and given that the interest lies in the relative contribution of theoretically distinct predictors to a single outcome rather than in the estimation of a measurement model, the constructs were operationalized as composite mean scores and analyzed through multiple regression within the SmartPLS 4 environment. Accordingly, the study is guided by two research questions:

- RQ1. To what extent do perceived ease of use, perceived usefulness, social influence, facilitating conditions, and anxiety jointly explain variance in teachers' behavioral intention to use GenAI in teaching?
- RQ2. What is the relative predictive importance of each determinant, and does anxiety function as a significant inhibitor once cognitive, social, and organizational factors are accounted for?

The study contributes on three fronts. Theoretically, it tests whether the classical TAM-UTAUT architecture retains explanatory adequacy for a technology whose defining characteristic generative, probabilistic, and occasionally erroneous output differs qualitatively from the deterministic systems for which these models were originally formulated. Empirically, it supplies evidence from a cross-sector in-service teacher sample in a large non-Western system that remains underrepresented relative to its share of the world's teaching workforce. Practically, it identifies which levers institutions can pull, and which they cannot, when seeking to promote responsible GenAI integration.

2. Theoretical Frameworks

2.1 Use Generative AI in Teaching

Generative artificial intelligence denotes systems that employ deep learning architectures, most prominently large language models, to produce original content in response to natural language prompts (Lim et al., 2023).

What distinguishes GenAI from earlier educational technologies is not automation as such but the locus of authorship: whereas a learning management system organizes materials that a teacher has created, a generative system produces candidate materials that the teacher then evaluates, edits, and either endorses or discards. This shift repositions the teacher from producer to curator and evaluator, and it is this repositioning rather than the underlying computation — that carries the greatest pedagogical significance (Chiu, 2023).

The instructional affordances documented in the emerging literature cluster around four areas. In lesson preparation, GenAI can generate outlines, learning objectives aligned to stated standards, worked examples, and analogies pitched at specified levels of prior knowledge, thereby compressing tasks that would otherwise consume substantial preparation time (Acquah et al., 2024). In differentiation, the same source text can be regenerated at multiple reading levels or translated for multilingual learners, supporting inclusive practice in heterogeneous classrooms. In assessment and feedback, GenAI can draft item banks, propose rubrics, and produce preliminary formative commentary that the teacher subsequently verifies. In teacher professional learning, the tools function as an always-available interlocutor for exploring unfamiliar content or pedagogical approaches. Empirical work reports that teachers who perceive these affordances as relevant to their instructional responsibilities express markedly stronger adoption intentions (Kong et al., 2024; Al-Abdullatif, 2024; Tomczyk & Majkut, 2025).

These affordances are accompanied by well-documented risks. Generative systems produce fluent output that may be factually incorrect, a failure mode with obvious consequences when the output reaches learners unchecked. Academic integrity concerns have intensified as students gain access to the same tools. Data privacy questions arise whenever student work or identifying information is submitted to third-party services. There is also a longer-horizon concern regarding professional deskilling, should routine reliance on generated materials erode the pedagogical reasoning that produces them. Recent evidence indicates that teachers' post-adoption evaluations of GenAI are shaped simultaneously by perceived affordances and perceived risks, such as algorithmic opacity and information hallucination, and that these evaluations can lead to discontinuance as readily as continued use. UNESCO (2023) has consequently emphasized human oversight, age-appropriate access thresholds, and the development of AI literacy among educators as conditions for responsible deployment.

Two implications follow for the present study. First, because GenAI use in teaching is discretionary, self-initiated, and only weakly mandated in most institutions, behavioral intention remains the theoretically appropriate proximal outcome. Second, because teachers evaluate GenAI simultaneously as an instrument of efficiency and as a source of professional risk, an acceptance model applied to this technology should incorporate both facilitating and inhibiting determinants a requirement that motivates the inclusion of anxiety alongside the four conventional positive predictors.

2.2 Technology Acceptance Research

The theoretical foundation of this study rests on two closely related traditions. The Technology Acceptance Model (Davis, 1989) proposed that adoption is governed principally by two beliefs: perceived usefulness, the extent to which a person believes a system will enhance job performance, and perceived ease of use, the degree to which the system is believed to require little effort. TAM's durability across four decades and hundreds of application domains reflects both its parsimony and the robustness of the usefulness-intention relationship, which has proven among the most replicable findings in information systems research.

The Unified Theory of Acceptance and Use of Technology (Venkatesh et al., 2003) synthesized eight competing models and introduced two determinants absent from the original TAM: social influence, the perception that significant others believe one should use the system, and facilitating conditions, the belief that organizational and technical infrastructure exists to support use. These additions were consequential because they relocated part of the explanatory burden from individual cognition to the surrounding organizational environment. A subsequent extension, UTAUT2, incorporated hedonic motivation, price value, and habit to accommodate voluntary consumer contexts (Venkatesh et al., 2012).

Applications of these frameworks to AI in education have proliferated. Ayanwale et al. (2022) found that teachers' AI readiness and confidence predicted their intention to teach AI content. Al Darayseh (2023) reported that perceived usefulness and ease of use jointly shaped science teachers' acceptance of AI applications. In the GenAI era specifically, Kong et al. (2024) demonstrated among 367 Hong Kong school teachers that self-efficacy, perceived usefulness, and attitude were the critical determinants of behavioral intention. Al-Abdullatif (2024) extended TAM with AI literacy, intelligent TPACK, and perceived trust among university teachers. Acquah et al. (2024) identified social influence as the single strongest predictor among 783 pre-service teachers planning lessons with AI, with facilitating conditions also contributing significantly. Kinskofer and Tulis

(2025), working with large Austrian samples, confirmed performance expectancy, effort expectancy, and social influence as consistent positive predictors for both students and teachers.

Anxiety occupies a more contested position within this literature. Compeau and Higgins (1995) established computer anxiety as a determinant of self-efficacy and use, and Venkatesh (2000) demonstrated that anxiety operates principally as an antecedent of perceived ease of use rather than as a direct determinant of intention. Wang and Wang (2022) subsequently developed an AI-specific anxiety instrument capturing learning, job replacement, sociotechnical blindness, and AI configuration dimensions. Applied to GenAI in education, findings remain mixed: Wang et al. (2024) reported that GenAI anxiety significantly predicted pre-service teachers' intentions, whereas Verano-Tacoronte et al. (2025) found that among Spanish faculty only anxiety about damage to student learning exerted a significant negative direct effect, with anxiety about professional displacement and personal misuse showing no such effect. This divergence suggests that anxiety's influence is conditional on its content, on the respondent's accumulated experience with the technology, and on whether its effect is modeled as direct or mediated.

The present study adopts a deliberately parsimonious specification. Perceived ease of use and perceived usefulness represent cognitive evaluations of the technology; social influence and facilitating conditions represent the social and organizational environment; anxiety represents the psychological barrier; and behavioral intention constitutes the outcome. This five-predictor structure retains the theoretically essential determinants from both TAM and UTAUT while remaining tractable for a regression-based estimation in which each construct enters as a single composite score. The hypotheses derived from this specification are presented in Table 2.

Table 1. Definitions of the Research Constructs

Construct	Definition	Operational Definition in This Study	Key References
Perceived Ease of Use (PEoU)	The degree to which an individual believes that using a technology is free of physical and mental effort.	Teachers' perceptions that Generative AI is easy to learn, understand, and integrate into teaching activities.	Davis (1989); Venkatesh et al. (2003)
Perceived Usefulness (PU)	The extent to which an individual believes that using a technology enhances job performance.	Teachers' perceptions that Generative AI improves instructional effectiveness, productivity, and teaching quality.	Davis (1989)
Social Influence (SI)	The degree to which important others influence an individual's decision to use a technology.	Perceived encouragement from colleagues, administrators, and educational institutions to adopt Generative AI.	Venkatesh et al. (2003)
Facilitating Conditions (FC)	The degree to which organizational and technical resources support technology use.	Teachers' perceptions regarding the availability of infrastructure, technical support, training, and resources required for using Generative AI.	Venkatesh et al. (2003)
Anxiety (ANX)	Feelings of fear, uncertainty, or discomfort associated with using new technology.	Teachers' concerns regarding errors, ethical issues, reliability, and confidence when using Generative AI in teaching.	Compeau & Higgins (1995); Pan & Li (2025)
Behavioral Intention (BI)	The degree to which an individual intends to use a technology in the future.	Teachers' intention and willingness to continue using Generative AI for instructional purposes.	Davis (1989); Venkatesh et al. (2003)

This study adopts an extended Technology Acceptance Model (TAM) integrated with selected constructs from the Unified Theory of Acceptance and Use of Technology (UTAUT). Perceived Ease of Use and Perceived Usefulness represent teachers' cognitive evaluations of Generative AI, whereas Social Influence and Facilitating Conditions reflect environmental and organizational factors. Anxiety is incorporated as an inhibiting factor to capture teachers' concerns regarding the use of Generative AI. Behavioral Intention serves as the dependent variable representing teachers' willingness to adopt Generative AI in future teaching practices.

2.3 State of the Art and Research Positioning

Recent GenAI acceptance research shows a clear movement beyond the original TAM toward models that combine cognitive beliefs with competence, social, organizational, and risk-related factors. Among school

teachers, Kong et al. (2024) identified self-efficacy, perceived usefulness, and attitude as central determinants of behavioral intention. In higher education, Al-Abdullatif (2024) extended the acceptance architecture by incorporating AI literacy, intelligent TPACK, and perceived trust. Studies of pre-service teachers have further emphasized social influence and facilitating conditions (Acquah et al., 2024), while evidence from Austrian students and teachers confirms the relevance of performance expectancy, effort expectancy, and social influence (Kinskofer & Tulis, 2025). Collectively, these studies indicate that GenAI adoption is not explained by usability or usefulness alone; it is embedded in teachers' professional competence and institutional environments.

Two unresolved issues are particularly important. First, findings concerning facilitating conditions remain inconsistent across populations. Their effect may be muted in pre-service settings where infrastructure is institutionally provided, but more consequential for in-service teachers who must work within actual organizational policies, technical support arrangements, and resource constraints. Second, the role of anxiety remains theoretically unsettled. Wang et al. (2024) reported a significant relationship in pre-service teachers, whereas Verano-Tacoronte et al. (2025) showed that only particular forms of faculty anxiety were consequential. These contrasting results indicate that both user experience and the conceptual specificity of anxiety may condition its relationship with adoption intention.

The present study is positioned at this intersection. Rather than maximizing model complexity, it tests a parsimonious integrated TAM-UTAUT specification in a cross-sector sample of 500 in-service teachers and simultaneously examines four enabling determinants and one inhibiting determinant. This positioning permits a direct assessment of whether the established cognitive, social, and organizational mechanisms remain explanatory in the GenAI context and whether generalized anxiety retains an independent inhibitory effect after those mechanisms are controlled. The study therefore extends the state of the art by shifting attention from predominantly pre-service or single-sector samples toward experienced teachers working across medical higher education, vocational higher education, and primary education.

2.4 Research Model and Hypotheses

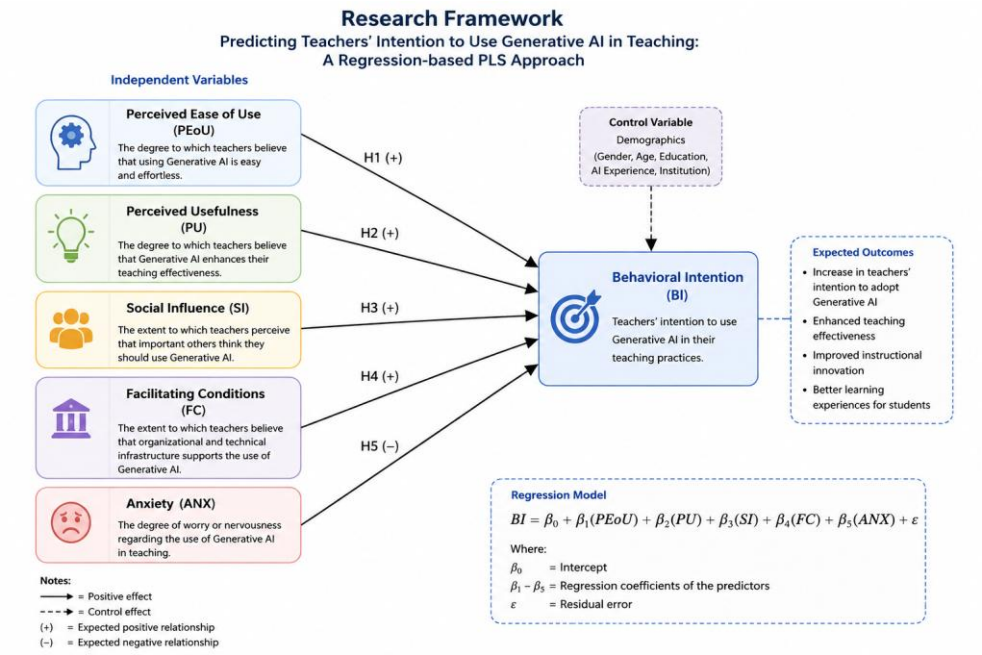

Figure 1. Research framework

Table 2. Proposed Research Hypotheses

Hypothesis	Statement	Theoretical Rationale
H1	Perceived Ease of Use (PEoU) positively influences teachers' Behavioral Intention (BI) to use Generative AI.	Technologies perceived as easy to use reduce effort expectancy and increase users' intention to adopt them.
H2	Perceived Usefulness (PU) positively influences teachers' Behavioral Intention (BI) to use Generative AI.	Teachers are more likely to adopt technologies that improve instructional effectiveness and job performance.
H3	Social Influence (SI) positively influences teachers' Behavioral Intention (BI) to use Generative AI.	Institutional support and peer encouragement increase teachers' motivation to adopt educational technologies.
H4	Facilitating Conditions (FC) positively influence teachers' Behavioral Intention (BI) to use Generative AI.	Adequate resources, infrastructure, and technical assistance facilitate technology adoption.
H5	Anxiety (ANX) negatively influences teachers' Behavioral Intention (BI) to use Generative AI.	Feelings of uncertainty and technology-related stress reduce teachers' willingness to adopt new technologies.

The proposed hypotheses are grounded primarily in the Technology Acceptance Model (TAM) and complemented by constructs from the Unified Theory of Acceptance and Use of Technology (UTAUT). The model assumes that teachers' behavioral intention to use Generative AI is jointly determined by cognitive beliefs (PEoU and PU), social and organizational influences (SI and FC), and psychological barriers (ANX). Specifically, PEoU, PU, SI, and FC are hypothesized to positively affect Behavioral Intention, whereas Anxiety is expected to negatively affect Behavioral Intention.

3. Methodology

3.1 Research Design

This study employed a quantitative, cross-sectional, predictive research design to examine factors influencing teachers' behavioral intention to use generative artificial intelligence in teaching. The proposed model integrates variables derived from the Technology Acceptance Model and the Unified Theory of Acceptance and Use of Technology. Five predictor variables, Perceived Ease of Use (PEoU), Perceived Usefulness (PU), Social Influence (SI), Facilitating Conditions (FC), and Anxiety (ANX), were examined in relation to Behavioral Intention (BI).

Data were collected through a structured questionnaire administered to teachers from three educational institutions in China. Because the study sought to determine the relative contributions of several observed predictors to a single dependent variable, the data were analyzed using the Regression module in SmartPLS. The regression approach used composite mean scores for each variable. Thus, the four PEoU items, four PU items, three SI items, three FC items, three ANX items, and four BI items were averaged to create six observed variables for regression analysis.

The research design was appropriate because it enabled the study to estimate standardized and unstandardized regression coefficients, evaluate the statistical significance of each predictor, determine the proportion of variance in behavioral intention explained, and assess the assumptions underlying multiple regression.

3.2 Participants

Based on the demographic information supplied for this study, the participants were 500 teachers from three educational institutions in China: Jinzhou Medical University, Sichuan Jiaotong Polytechnic University, and Houyao Central Primary School in Changtu County. The participant profile is consistent with the research title, focusing on teachers' intention to use generative AI rather than a student sample from a single vocational college.

Participants were recruited using a non-probability sampling procedure combining institutional accessibility and purposive selection. Eligible respondents were teachers currently involved in teaching and had at least some awareness or experience with generative AI applications. Participation was voluntary. Before completing the questionnaire, respondents received information about the study's purpose, the confidentiality of their responses, anonymity, and their right to withdraw at any time.

3.3 Instrumentation

Data were collected using a bilingual Chinese structured questionnaire. The questionnaire consisted of three sections. The first section presented the informed-consent statement. The second collected demographic information, including institution, gender, age, educational qualification, and experience using generative AI. The third contained 21 statements measuring the six variables included in the proposed regression model.

The questionnaire was developed from established technology-acceptance concepts. Perceived Ease of Use and Perceived Usefulness were based on the Technology Acceptance Model, whereas Social Influence and Facilitating Conditions were informed by the Unified Theory of Acceptance and Use of Technology. Anxiety was identified as a potential psychological barrier to the adoption of generative AI. Behavioral Intention represented the dependent variable.

All statements were rated using a five-point Likert scale:

1 = Strongly disagree
2 = Disagree
3 = Neutral/uncertain
4 = Agree
5 = Strongly agree

Higher scores on PEoU, PU, SI, FC, and BI indicated stronger positive perceptions or intentions. Higher ANX scores indicated greater anxiety concerning the use of generative AI.

For regression analysis, item scores were aggregated as follows:

$$PEoU = \frac{PEoU1 + PEoU2 + PEoU3 + PEoU4}{4}$$

$$PU = \frac{PU1 + PU2 + PU3 + PU4}{4}$$

$$SI = \frac{SI1 + SI2 + SI3}{3}$$

$$FC = \frac{FC1 + FC2 + FC3}{3}$$

$$ANX = \frac{ANX1 + ANX2 + ANX3}{3}$$

$$BI = \frac{BI1 + BI2 + BI3 + BI4}{4}$$

Figure 2. Calculation of Composite Scores for the Research Variables

Before calculating the composite scores, the dataset was screened for missing values, out-of-range responses, duplicate records, and coding errors. Composite scores were then calculated according to the scoring rules shown in Figure 2 and Tables 3-4.

Table 3. Items of Questionnaire

Variable	Code	Number of items	Role in the model	Score calculation
Perceived Ease of Use	PEoU	4	Independent variable	Mean of PEoU1-PEoU4
Perceived Usefulness	PU	4	Independent variable	Mean of PU1-PU4
Social Influence	SI	3	Independent variable	Mean of SI1-SI3
Facilitating Conditions	FC	3	Independent variable	Mean of FC1-FC3
Anxiety	ANX	3	Independent variable	Mean of ANX1-ANX3
Behavioral Intention	BI	4	Dependent variable	Mean of BI1-BI4
Total		**21**		

Table 4. Questionnaire Items

Code	Variable	Questionnaire item
PEoU1	Perceived Ease of Use	Learning to use generative AI for teaching is easy for me.
PEoU2	Perceived Ease of Use	I can become skillful at using generative AI.
PEoU3	Perceived Ease of Use	My interaction with generative AI is clear and understandable.
PEoU4	Perceived Ease of Use	Generative AI is easy to use for my classroom-related tasks.
PU1	Perceived Usefulness	Using generative AI improves my teaching performance.
PU2	Perceived Usefulness	Generative AI increases the effectiveness of my teaching.
PU3	Perceived Usefulness	Generative AI increases my productivity as a teacher.
PU4	Perceived Usefulness	Generative AI enables me to teach more efficiently.
SI1	Social Influence	People who influence my teaching think that I should use generative AI.
SI2	Social Influence	People who are important to me support my use of generative AI.
SI3	Social Influence	My institution encourages me to use generative AI in teaching.
FC1	Facilitating Conditions	I have the resources necessary to use generative AI.
FC2	Facilitating Conditions	I have the knowledge necessary to use generative AI.
FC3	Facilitating Conditions	I receive adequate technical support for using generative AI.
ANX1	Anxiety	I feel anxious when using generative AI in teaching.
ANX2	Anxiety	I worry that I may make mistakes when using generative AI.
ANX3	Anxiety	I feel overwhelmed when I think about using generative AI.
BI1	Behavioral Intention	I intend to use generative AI in my future teaching.
BI2	Behavioral Intention	I will try to use generative AI consistently in teaching.
BI3	Behavioral Intention	I plan to increase my use of generative AI in teaching.
BI4	Behavioral Intention	I will recommend that other teachers use generative AI.

3.4 Materials and Research Tools

For analysis, item responses were transformed into six observed composite scores by calculating the arithmetic mean of the items belonging to each construct. SmartPLS 4 was used as the statistical analysis environment, specifically its Regression module rather than the PLS-SEM algorithm. The software was used to estimate the multiple-regression model, standardized and unstandardized coefficients, collinearity diagnostics, model explanatory power, and bootstrap confidence intervals based on 5,000 subsamples. Thus, SmartPLS 4 functioned as a regression-analysis platform; no latent-variable measurement model was estimated in the present study.

The principal research material was a bilingual Chinese structured questionnaire comprising an informed-consent statement, demographic questions, and 21 Likert-type items representing PEoU, PU, SI, FC, ANX, and BI. The item set and scoring procedure are reported in Tables 3 and 4 and Figure 2. The questionnaire served as the standardized data-collection instrument across the three participating institutions, allowing the same operational definitions and response scale to be applied to all 500 respondents.

3.5 Data Analysis

The data were analyzed using descriptive statistics and multiple regression in SmartPLS's Regression module. This analysis did not estimate latent constructs or measurement-model relationships. Instead, each variable was represented by an observed composite score calculated as the arithmetic mean of its corresponding questionnaire items.

The analysis was conducted in four stages.

First, data screening was undertaken to identify missing responses, data-entry errors, scores outside the permitted

range of 1-5, and incomplete cases. Descriptive statistics were then calculated, including the mean, median, minimum, maximum, standard deviation, skewness, and excess kurtosis. These statistics were used to describe the central tendency, dispersion, and distributional characteristics of each composite variable.

Second, bivariate relationships among the composite variables were inspected as a preliminary descriptive check before estimating the multivariable regression model.

Third, the regression assumptions were evaluated. Multicollinearity was assessed using collinearity diagnostics, including the condition index and variance proportions. The independence of residuals was examined using the Durbin-Watson statistic; a value close to 2 indicates no serious autocorrelation. Normality of residuals was assessed through the residual histogram and Q-Q plot. Homoscedasticity and linearity were examined using the scatterplot of standardized residuals against predicted BI values. The predicted-versus-actual plot was also reviewed to evaluate the correspondence between observed and model-predicted BI scores.

Fourth, multiple regression was performed using the following model:

$$BI = \beta_0 + \beta_1(PEoU) + \beta_2(PU) + \beta_3(SI) + \beta_4(FC) + \beta_5(ANX) + \varepsilon$$

where:

- BI represents Behavioral Intention;
- β_0 represents the intercept;
- β_1 to β_5 represent the regression coefficients;
- ε represents the residual error.

Figure 3. Multiple Regression Model Used in the Study

Figure 3. Multiple Regression Model Used in the Study. Behavioral Intention (BI) is predicted by Perceived Ease of Use (PEoU), Perceived Usefulness (PU), Social Influence (SI), Facilitating Conditions (FC), and Anxiety (ANX). The model estimates the intercept (β_0), regression coefficients (β_1-β_5), and the residual error term (ε) using the SmartPLS Regression module.

Both unstandardized and standardized coefficients were reported. The standardized coefficients were used to compare the relative predictive contribution of the independent variables. Statistical significance was determined using *t*-values, *p*-values, and 95% confidence intervals. A predictor was regarded as statistically significant when $p < .05$ and its confidence interval did not include zero.

The coefficient of determination (R^2) was used to evaluate the proportion of variance in BI explained jointly by the five predictors. Adjusted R^2 was also considered because it corrects the explanatory estimate for the number of predictors included in the model. Bootstrapping was used to assess the stability of coefficient estimates and confidence intervals.

The hypotheses were evaluated as follows:

- H1 was supported when PEoU had a significant positive coefficient.
- H2 was supported when PU had a significant positive coefficient.
- H3 was supported when SI had a significant positive coefficient.
- H4 was supported when FC had a significant positive coefficient.
- H5 was supported when ANX had a significant negative coefficient.

4. Results

These findings were obtained from the statistical analyses conducted using the Regression module of SmartPLS 4. The results are organized into six sections. First, the demographic characteristics of the respondents are described. Second, descriptive statistics of the research variables are presented. Third, multicollinearity diagnostics are examined to verify the absence of serious collinearity among predictors. Fourth, the regression model's explanatory power is evaluated using the coefficient of determination. Fifth, regression coefficients and hypothesis testing are reported. Finally, bootstrap confidence intervals are presented to confirm the robustness of the estimated regression coefficients.

4.1 Demographic Characteristics of the Respondents

A total of 500 valid questionnaires were collected from teachers at three educational institutions in China: Jinzhou Medical University, Sichuan Jiaotong Polytechnic University, and Houyao Central Primary School in Changtu County. The response rate was satisfactory, and no questionnaires were excluded because all responses were complete.

Table 5. Demographic Characteristics of the Respondents (N = 500)

Characteristic	Category	n	%
Institution	Jinzhou Medical University	185	37.0
	Sichuan Jiaotong Polytechnic University	165	33.0
	Houyao Central Primary School, Changtu County	150	30.0
	Total	**500**	**100.0**
Gender	Male	196	39.2
	Female	304	60.8
	Total	**500**	**100.0**
Age	Under 30 years	108	21.6
	30-39 years	182	36.4
	40-49 years	146	29.2
	50 years and above	64	12.8
	Total	**500**	**100.0**
Highest Educational Qualification	Bachelor's Degree	132	26.4
	Master's Degree	288	57.6
	Doctoral Degree	80	16.0
	Total	**500**	**100.0**
Experience Using Generative AI	Less than 6 months	98	19.6
	6-12 months	134	26.8
	1-2 years	176	35.2
	More than 2 years	92	18.4
	Total	**500**	**100.0**

Table 5 indicates that the respondents were relatively well distributed across the three participating institutions. Jinzhou Medical University contributed the largest proportion of respondents (37.0%), followed by Sichuan Jiaotong Polytechnic University (33.0%) and Houyao Central Primary School (30.0%). This distribution included representation from both higher and primary education contexts, thereby increasing the diversity of instructional environments in the study.

Female teachers accounted for 60.8% of the respondents, whereas male teachers represented 39.2%. Regarding age, teachers aged 30-39 years constituted the largest group (36.4%), followed by those aged 40-49 years (29.2%). More than half of the respondents held a master's degree (57.6%), reflecting the academic qualifications commonly expected in Chinese educational institutions. Furthermore, approximately one-third of the respondents (35.2%) had one to two years of experience using Generative AI, indicating that the majority possessed sufficient practical exposure to evaluate its usefulness and usability.

4.2 Descriptive Statistics of the Research Variables

Descriptive statistics were calculated to summarize the central tendency and distribution of the six research variables before conducting regression analysis. Table 6 presents the mean, median, minimum, maximum, standard deviation, skewness, and excess kurtosis for each variable.

Table 6. Descriptive Statistics of the Research Variables

Variable	Mean	SD	Min	Max	Skewness	Excess Kurtosis
PEoU	3.679	0.435	2.000	4.750	-0.637	0.706
PU	3.796	0.421	2.250	5.000	-0.469	0.406
SI	3.481	0.473	2.000	4.667	-0.458	0.243
FC	3.385	0.431	2.000	4.667	-0.283	0.055
ANX	3.273	0.414	2.000	5.000	0.390	1.117
BI	3.836	0.484	2.250	5.000	-0.549	0.154

As shown in Table 6, Behavioral Intention (BI) recorded the highest mean score (M = 3.836, SD = 0.484), suggesting that respondents generally expressed a positive intention to use Generative AI in their future teaching practices. Perceived Usefulness (PU) exhibited the second-highest mean (M = 3.796), followed by Perceived Ease of Use (PEoU) (M = 3.679), indicating that teachers generally considered Generative AI to be both useful and relatively easy to use. Social Influence (SI) and Facilitating Conditions (FC) showed moderate mean values, reflecting moderate institutional and social support for AI integration.

Among all variables, Anxiety (ANX) obtained the lowest mean score (M = 3.273), implying that respondents experienced only moderate concern regarding the use of Generative AI.

The skewness values ranged from −0.637 to 0.390, while excess kurtosis ranged from 0.055 to 1.117. These values fall within commonly accepted thresholds for approximate normality, suggesting that the distributions of the composite variables were appropriate for regression analysis.

4.3 Regression Assumption Diagnostics

Prior to multiple regression analysis, the assumptions of the model were examined. The Durbin-Watson statistic was 2.078, indicating no evidence of problematic residual autocorrelation. Multicollinearity was not a concern, with VIF values ranging from 1.046 to 1.238. Residuals showed only minor departures from normality (skewness = −0.288; excess kurtosis = −0.055). Although the Shapiro-Wilk test was statistically significant (p = .041), this result should be interpreted cautiously given the large sample size (N = 500), for which formal normality tests are highly sensitive to small deviations. The Breusch-Pagan test was non-significant (p = .147), providing no evidence of heteroscedasticity. Overall, the residual diagnostics indicated that the principal assumptions required for multiple regression were reasonably satisfied. According to Hair et al. (2022), VIF values below 5.00 indicate that multicollinearity is not a serious concern, whereas values below 3.00 generally indicate a very low degree of collinearity.

Table 7. Variance Inflation Factor (VIF) of the Independent Variables

Variable	VIF
Perceived Ease of Use (PEoU)	1.238
Perceived Usefulness (PU)	1.226
Social Influence (SI)	1.237
Facilitating Conditions (FC)	1.214
Anxiety (ANX)	1.046

As presented in Table 7, the VIF values ranged from 1.046 to 1.238, substantially below the recommended threshold of 5.00. These findings indicate that the five independent variables were not highly correlated with one another. Consequently, multicollinearity was not considered a threat to the regression analysis, and each predictor contributed unique explanatory information regarding teachers' behavioral intention to use Generative AI.

The relatively low VIF values also demonstrate that the regression coefficients can be interpreted with confidence because inflation of standard errors due to redundant predictors was minimal.

4.4 Regression Model and Explanatory Power

After examining the regression assumptions, the proposed regression model was estimated using the SmartPLS Regression module. Table 8 summarizes the model's explanatory power.

Table 8. Regression Model Summary

Statistic	Value
R^2	0.327
Adjusted R^2	0.320

The regression model explained 32.7% of the variance in teachers' behavioral intention to use Generative AI (R^2 = 0.327). According to Cohen (1988), this represents a moderate level of explanatory power, suggesting that the selected predictors jointly provide a meaningful explanation of teachers' technology adoption intentions.

The adjusted coefficient of determination (Adjusted R^2 = 0.320) was only slightly lower than R^2 = 0.327, indicating that the estimated explanatory power changed little after adjustment for the number of predictors included in the model.

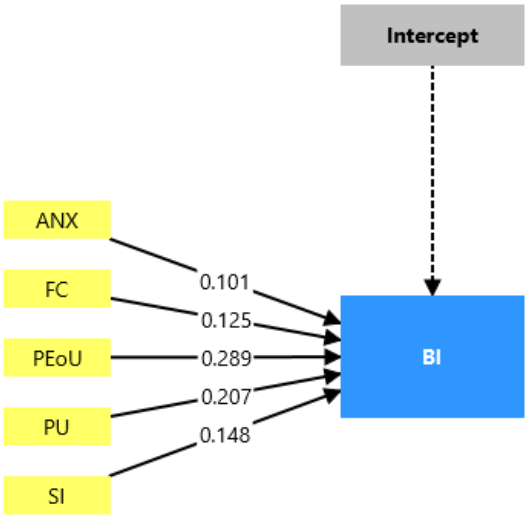

Figure 4. Regression Model Predicting Teachers' Behavioral Intention

Figure 4 presents the standardized regression coefficients obtained from the final model. Perceived Usefulness exhibited the strongest positive influence on Behavioral Intention, followed by Facilitating Conditions, Perceived Ease of Use, and Social Influence. Anxiety demonstrated only a very weak positive coefficient and was not statistically significant.

4.5 Regression Coefficients and Hypothesis Testing

Following the estimation of the regression model, the significance of each independent variable was examined using standardized regression coefficients (β), standard errors, *t*-statistics, *p*-values, and 95% confidence intervals.

Table 9. Regression Coefficients

Predictor	B	β	SE	t	p
PEoU	0.220	0.198	0.046	4.818	<.001
PU	0.261	0.228	0.047	5.568	<.001
SI	0.200	0.195	0.042	4.752	<.001
FC	0.232	0.206	0.046	5.072	<.001
ANX	0.021	0.018	0.044	0.480	0.631

The regression results revealed that Perceived Usefulness was the strongest predictor of Behavioral Intention (β = 0.228, $p < .001$), indicating that teachers who perceived Generative AI as useful were more likely to intend to adopt it in their teaching practices.

Facilitating Conditions was identified as the second strongest predictor (β = 0.206, $p < .001$), suggesting that institutional support, technical infrastructure, and available resources substantially influence teachers' intention to adopt AI technologies.

Perceived Ease of Use (β = 0.198, $p < .001$) also demonstrated a significant positive influence, indicating that teachers were more willing to adopt Generative AI when they perceived it as easy to learn and operate.

Similarly, Social Influence exerted a significant positive effect (β = 0.195, $p < .001$), implying that encouragement from colleagues, administrators, and institutions contributed positively to teachers' intention to use Generative AI.

Conversely, Anxiety showed a very small regression coefficient (β = 0.018) and failed to reach statistical significance ($p = .631$). This finding suggests that psychological concerns regarding the use of Generative AI did not significantly reduce teachers' behavioral intention after the effects of the other predictors had been taken into account.

Overall, the standardized regression coefficients indicate the following order of predictor importance:

PU > FC > PEoU > SI > ANX

Table 10. Hypothesis Testing

Hypothesis	Relationship	β	p	Decision
H1	PEoU → BI	0.198	<.001	Supported
H2	PU → BI	0.228	<.001	Supported
H3	SI → BI	0.195	<.001	Supported
H4	FC → BI	0.206	<.001	Supported
H5	ANX → BI	0.018	0.631	Not Supported

As shown in Table 10, four of the five proposed hypotheses were supported. Specifically, Perceived Ease of Use, Perceived Usefulness, Social Influence, and Facilitating Conditions all had statistically significant positive effects on Behavioral Intention. In contrast, the hypothesized negative influence of Anxiety was not supported.

4.6 Bootstrap Validation

To verify the robustness of the regression estimates, bootstrap resampling was performed. Table 11 reports the 95% confidence intervals for each regression coefficient.

Table 11. Bootstrap Confidence Intervals

Predictor	Lower 95% CI	Upper 95% CI	Result
PEoU	0.130	0.310	Supported
PU	0.169	0.354	Supported
SI	0.117	0.282	Supported
FC	0.142	0.321	Supported
ANX	-0.066	0.108	Not Supported

The bootstrap confidence intervals provide additional evidence supporting the stability of the regression estimates. The confidence intervals for PEoU, PU, SI, and FC did not include zero, confirming that these predictors exert statistically significant positive effects on Behavioral Intention.

In contrast, the confidence interval associated with Anxiety ranged from −0.066 to 0.108, crossing zero. This result further confirms that Anxiety was not a statistically significant predictor in the present model.

The consistency between the regression coefficients, significance tests, and bootstrap confidence intervals indicates that the proposed regression model is statistically robust and provides reliable estimates of the determinants influencing teachers' behavioral intention to use Generative AI.

5. Discussion

This study examined the determinants of in-service teachers' behavioral intention to use generative AI in teaching within an integrated TAM-UTAUT framework, using composite-score multiple regression estimated in SmartPLS 4. The model explained 32.7% of the variance in behavioral intention, a magnitude conventionally interpreted as moderate (Cohen, 1988) and consistent with parsimonious acceptance models that exclude experiential, motivational, and competence-related constructs. Four of the five hypotheses were supported. The discussion below considers each determinant in turn, then addresses the theoretical and practical implications.

5.1 Perceived Usefulness as the Dominant Determinant

Perceived usefulness emerged as the strongest predictor of behavioral intention ($\beta = .228$, $p < .001$), replicating the most consistently reported finding in the technology acceptance literature (Davis, 1989) and aligning with recent GenAI-specific evidence from school teachers in Hong Kong (Kong et al., 2024) and university teachers in Saudi Arabia (Al-Abdullatif, 2024). The descriptive pattern reinforces this interpretation: perceived usefulness recorded the second-highest mean of all constructs ($M = 3.796$), exceeded only by behavioral intention itself ($M = 3.836$).

The substantive reading is that teachers evaluate GenAI instrumentally. Adoption follows from a judgment that the technology reduces preparation burden or improves instructional quality, not from novelty or enthusiasm for AI as such. This has a direct corollary for professional development: programs that showcase GenAI's general capabilities without demonstrating discipline-specific instructional gains are unlikely to move adoption intentions. The most effective interventions will be those that make the performance benefit concrete and immediate within a teacher's own subject and grade level.

5.2 Facilitating Conditions as the Second Determinant

Facilitating conditions ranked second in predictive importance ($\beta = .206$, $p < .001$). This result is theoretically notable because it diverges from several recent studies. Wang et al. (2024) found facilitating conditions non-significant among Chinese pre-service teachers, and at least one study of university lecturers reported an unexpected negative association, attributed to satisfaction with existing resources reducing the perceived necessity of new tools. The present finding, obtained from in-service teachers, points toward a plausible reconciliation: pre-service teachers operate within university environments where infrastructure is provided as a matter of course and therefore does not register as a differentiating consideration, whereas in-service teachers must secure access, subscriptions, technical support, and critically institutional permission within their own workplaces. For them, facilitating conditions are a live constraint rather than an ambient given.

This interpretation gains support from the descriptive statistics. Facilitating conditions recorded the lowest mean among the four positive predictors ($M = 3.385$), indicating that respondents perceived institutional provisioning as the weakest element of their adoption environment. The combination of high predictive importance and low perceived adequacy identifies facilitating conditions as the priority intervention target: it is the construct where improvement is both consequential and most needed. Because facilitating conditions are also the determinant most directly under institutional control, this finding carries the clearest actionable implication of the study.

5.3 Perceived Ease of Use and Social Influence

Perceived ease of use ($\beta = .198$, $p < .001$) and social influence ($\beta = .195$, $p < .001$) both contributed significantly, with effects of comparable magnitude. The ease-of-use finding is consistent with the observation that conversational interfaces lower the technical threshold for adoption relative to earlier educational software; the relatively high mean for this construct ($M = 3.679$) suggests respondents did not experience GenAI as difficult to operate. The social influence finding accords with Acquah et al. (2024), who identified social influence as the strongest predictor among pre-service teachers, and with Kinskofer and Tulis (2025). Its somewhat lower rank in the present study may reflect the ambiguity of the normative environment surrounding GenAI: where institutional policy is still emergent, teachers receive fewer unambiguous signals about expected behavior than they would for an established, formally mandated technology. The moderate mean for social influence ($M = 3.481$) is consistent with this reading.

5.4 The Non-Significant Effect of Anxiety

The most theoretically interesting result is the failure of anxiety to predict behavioral intention ($\beta = .018$, $p = .631$), with a bootstrap confidence interval of $[-.066, .108]$ spanning zero. The hypothesized inhibitory effect was not supported, and the coefficient sign was in fact marginally positive. Four explanations merit consideration.

First, and most probably, experience attenuates anxiety's influence. Approximately 80% of respondents reported at least six months of GenAI use, and 53.6% reported more than one year. Anxiety is theorized to exert its strongest influence at the pre-adoption stage, when uncertainty about system behavior is greatest; among experienced users, direct experience supplies the information that anxiety would otherwise substitute for. Wang et al. (2024), who did detect a significant anxiety effect, sampled pre-service teachers with correspondingly less accumulated exposure.

Second, anxiety may operate indirectly rather than directly. Venkatesh (2000) demonstrated that computer anxiety influences intention principally through perceived ease of use. If this mediational structure holds for GenAI, the direct path tested here would be expected to attenuate toward zero once perceived ease of use is entered into the same equation. The present regression design, which estimates only direct effects on a single dependent variable, cannot adjudicate this possibility a limitation acknowledged below.

Third, the anxiety construct may have been too generic. Verano-Tacoronte et al. (2025) disaggregated faculty anxiety into three distinct dimensions and found that only anxiety concerning harm to student learning predicted intention, while anxiety about professional displacement and personal misuse did not. The three-item measure employed here captured general performance-related apprehension fear of errors, of being overwhelmed rather than the pedagogically consequential concerns that appear to matter. A more differentiated instrument, such as that of Wang and Wang (2022), might have detected effects that the present measure could not.

Fourth, restricted variance may have limited detection. Anxiety recorded the lowest mean ($M = 3.273$) with the narrowest standard deviation ($SD = 0.414$) among all constructs, indicating that respondents clustered near the scale midpoint without strong differentiation. Restricted range attenuates observable relationships irrespective of any underlying association.

Taken together, these considerations suggest that generalized technology anxiety should not be treated as a primary barrier to GenAI adoption among teachers who already possess practical exposure. This does not license the conclusion that teachers' concerns are inconsequential; it indicates that the concerns that matter are likely to be specific, pedagogical, and ethical rather than diffusely psychological.

5.5 Comparative Synthesis and Progress Beyond Prior Work

These comparisons clarify the study's incremental progress over previous work. First, it demonstrates that a parsimonious TAM-UTAUT regression architecture remains informative for GenAI despite the technology's generative and probabilistic characteristics. Second, it shows that the relative importance of adoption determinants changes with the implementation context: institutional provisioning is especially consequential in an in-service, cross-sector sample. Third, the null anxiety effect identifies a boundary condition for generalized technology-anxiety explanations and points toward multidimensional or mediated models in future research. These advances should nevertheless be interpreted within the study's cross-sectional, non-probability, self-report design and its use of composite scores rather than a latent-variable measurement model.

The anxiety finding provides a second point of progress. Instead of treating anxiety as a uniformly negative adoption barrier, the present results show that generalized anxiety adds virtually no direct explanatory power once usefulness, ease of use, social influence, and facilitating conditions are considered. This pattern is compatible with Venkatesh's (2000) proposition that anxiety may operate indirectly through perceived ease of use and with Verano-Tacoronte et al. (2025), who demonstrated that the effect depends on the specific content of anxiety. The contribution is therefore not evidence that anxiety is irrelevant, but evidence that a broad direct-effect specification may be insufficient for experienced GenAI users.

Viewed comparatively, the present results both reproduce and qualify prior GenAI acceptance findings. The positive effect of perceived usefulness converges with Kong et al. (2024) and Al-Abdullatif (2024), supporting the persistence of the instrumental-value mechanism across school and university contexts. The significant social influence effect is also consistent with Acquah et al. (2024) and Kinskofer and Tulis (2025), although its smaller relative coefficient in the present sample suggests that normative pressure may be less decisive for experienced in-service teachers than for pre-service teachers. The facilitating-conditions result is more distinctive: its position as the second strongest predictor contrasts with studies in which the construct was weak or non-significant, indicating that organizational resources may become more salient when teachers are responsible for implementing GenAI under real workplace constraints.

5.6 Theoretical and Practical Implications

Theoretically, the results indicate that the classical TAM-UTAUT architecture retains substantial explanatory adequacy for GenAI, but with two qualifications. The near-equivalence of the four significant coefficients (β = .195-.228) suggests that no single determinant dominates in the way TAM's original formulation implies; adoption appears to rest on the joint satisfaction of cognitive, organizational, and social conditions rather than on the maximization of any one. Moreover, the unexplained 67.3% of variance signals that constructs specific to generative technologies AI literacy, trust, perceived risk, hallucination concern, and intelligent TPACK (Al-Abdullatif, 2024) are likely required for a fuller account.

Practically, three recommendations follow. Institutions should prioritize the strengthening of facilitating conditions, since this determinant combines high predictive weight with the lowest perceived adequacy and the greatest institutional controllability; concretely, this means licensed tool access, clearly communicated usage policy, and responsive technical support rather than one-off training events. Professional development should be organized around demonstrable, discipline-specific performance gains rather than general AI awareness, given the primacy of perceived usefulness. Finally, institutions should establish explicit normative signals, departmental exemplars, peer-led communities of practice, and leadership endorsement to convert an ambiguous social environment into a supportive one.

6. Limitations of the Study and Future Research

Several limitations qualify the interpretation of these findings.

Design and causal inference. The cross-sectional design permits the identification of associations but not causal claims. Reciprocal influence is plausible — teachers who already intend to use GenAI may retrospectively rate it as more useful and longitudinal or experimental designs are required to establish directionality.

Analytical approach. The study estimated composite-score multiple regressions rather than a latent-variable structural model. This choice supports parsimony and interpretability, but it carries three consequences. Measurement error is not modeled, so coefficients may be attenuated. No measurement model was estimated,

meaning that convergent validity, discriminant validity, and construct reliability were not formally established, and internal consistency should be verified before composite means are computed. Indirect effects cannot be tested, which is a material constraint given the theoretical possibility that anxiety influences intention through perceived ease of use (Venkatesh, 2000). Future work should re-estimate the model using PLS-SEM or CB-SEM with a full measurement model, and should apply importance-performance map analysis to refine the prioritization of intervention targets.

Sampling and generalizability. Participants were recruited through non-probability purposive sampling from three institutions in China. Although the sample spans medical higher education, vocational higher education, and primary education, the institutions were not randomly selected and the findings should not be generalized to Chinese teachers as a population, still less internationally. The pronounced heterogeneity of the sample also raises the possibility that structural relationships differ across educational levels; the present analysis pooled all respondents and therefore may have masked such differences. Multi-group analysis by institutional type, discipline, teaching experience, and gender constitutes an obvious extension.

Common method bias. All variables were measured by self-report in a single instrument at a single time point, creating conditions under which common method variance may inflate observed relationships (Podsakoff et al., 2003). Future studies should incorporate procedural remedies such as temporal separation of predictor and criterion measurement, and should report statistical diagnostics such as Harman's single-factor test or a marker-variable assessment.

Construct coverage. The model explained 32.7% of the variance, leaving the majority unaccounted for. Constructs demonstrated to matter for GenAI specifically AI literacy, perceived trust, intelligent TPACK (Al-Abdullatif, 2024), perceived risk, habit, and hedonic motivation (Venkatesh et al., 2012) were not included. The anxiety measure in particular was unidimensional; given evidence that anxiety's effect depends on its content (Verano-Tacoronte et al., 2025), future research should employ multidimensional AI anxiety instruments (Wang & Wang, 2022).

Outcome measure. Behavioral intention was the terminal dependent variable; actual use behavior was not measured. The intention-behavior gap is well documented, and the inclusion of usage logs, frequency measures, or artifact analysis would substantially strengthen inference. Notably, the behavioral intention scale included an item measuring recommendation intention (BI4) alongside three personal-use items; its dimensional fit with the remaining items warrants explicit verification.

Directions for future research. Beyond the remedies noted above, three lines of inquiry appear productive. Mixed-methods designs combining survey data with interviews or reflective writing would illuminate the pedagogical reasoning underlying the quantitative patterns. Hybrid PLS-SEM-artificial neural network approaches (He & Ren, 2025; Acquah et al., 2024) could capture non-linear and compensatory relationships that linear regression cannot. Finally, longitudinal designs tracking teachers from initial exposure through sustained use or discontinuance would clarify whether the determinants identified here remain stable as GenAI moves from novelty to routine.

7. Conclusion

This study examined the determinants of 500 Chinese in-service teachers' behavioral intention to use generative AI in teaching through an integrated TAM-UTAUT framework estimated by composite-score regression. The model explained 32.7% of the variance in behavioral intention. Perceived usefulness was the strongest determinant, followed by facilitating conditions, perceived ease of use, and social influence, all with significant positive effects of comparable magnitude. Anxiety exerted no significant influence.

Two conclusions carry the greatest weight. First, teachers' adoption of GenAI is driven by a combination of instrumental value and institutional provisioning rather than by either alone; the near-equivalence of the four significant coefficients indicates that adoption requires the joint satisfaction of cognitive, organizational, and social conditions. Second, generalized technology anxiety does not function as a barrier among teachers who have already accumulated practical exposure to GenAI, suggesting that institutional effort is better directed toward demonstrating instructional value and strengthening support infrastructure than toward allaying diffuse psychological apprehension.

The practical priority indicated by these results is facilitating conditions, which combined high predictive importance with the lowest perceived adequacy of any positive determinant and lies most directly within institutional control. For teachers to integrate generative AI responsibly, they require not only evidence that it improves their instructional work, but the access, policy clarity, and technical support that make acting on that

evidence feasible.

Scientific contribution. This study provides cross-sector evidence that the core TAM-UTAUT determinants remain explanatory for in-service teachers' adoption of generative AI, identifies facilitating conditions as a comparatively strong institutional determinant, and establishes a boundary condition for generalized technology anxiety: after cognitive, social, and organizational determinants are controlled, anxiety shows no independent direct effect in this experienced-user sample. These findings refine the application of technology-acceptance theory to generative, probabilistic educational technologies and motivate future multidimensional and mediated models of AI-related anxiety.

Acknowledgments

The authors would like to thank all teachers who participated in this study and provided valuable data for the research. The authors also appreciate the assistance of colleagues who provided constructive comments during the development of the study and preparation of the manuscript.

Author contributions

Xu Chengjun: Conceptualization, methodology, investigation, data collection, formal analysis, and writing original draft. Thada Jantakoon: Conceptualization, methodology, supervision, validation, and writing review and editing. Rukthin Laoha: Methodology, validation, supervision, and writing review and editing. All authors read and approved the final manuscript.

Funding

This research received no specific grant from any funding agency in the public, commercial, or not-for-profit sectors.

Competing interests

The authors declare that they have no known competing financial interests or personal relationships that could have appeared to influence the work reported in this paper.

Informed consent

Informed consent was obtained from all participants involved in the study.

Ethics approval

Not applicable. This study did not fall within the scope of research requiring formal ethics approval under the applicable institutional guidelines.

Provenance and peer review

Not commissioned; externally double-blind peer reviewed.

Data availability statement

The data that support the findings of this study are available on request from the corresponding author. The data are not publicly available due to privacy or ethical restrictions.

Data sharing statement

No additional data are available.

Open access

This is an open-access article distributed under the terms and conditions of the Creative Commons Attribution license (http://creativecommons.org/licenses/by/4.0/).

Copyrights

Copyright for this article is retained by the author(s), with first publication rights granted to the journal.

References

Acquah, B. Y. S., Arthur, F., Salifu, I., Quayson, E., & Nortey, S. A. (2024). Preservice teachers' behavioural intention to use artificial intelligence in lesson planning: A dual-staged PLS-SEM-ANN approach. *Computers and Education: Artificial Intelligence, 7*, 100307. https://doi.org/10.1016/j.caeai.2024.100307

Al Darayseh, A. (2023). Acceptance of artificial intelligence in teaching science: Science teachers' perspective. *Computers and Education: Artificial Intelligence, 4*, 100132. https://doi.org/10.1016/j.caeai.2023.100132

Al-Abdullatif, A. M. (2024). Modeling teachers' acceptance of generative artificial intelligence use in higher

education: The role of AI literacy, intelligent TPACK, and perceived trust. *Education Sciences, 14*(11), 1209. https://doi.org/10.3390/educsci14111209

Ayanwale, M. A., Sanusi, I. T., Adelana, O. P., Aruleba, K. D., & Oyelere, S. S. (2022). Teachers' readiness and intention to teach artificial intelligence in schools. *Computers and Education: Artificial Intelligence, 3*, 100099. https://doi.org/10.1016/j.caeai.2022.100099

Chiu, T. K. F. (2023). The impact of generative AI (GenAI) on practices, policies and research direction in education: A case of ChatGPT and Midjourney. *Interactive Learning Environments*. Advance online publication. https://doi.org/10.1080/10494820.2023.2253861

Cohen, J. (1988). *Statistical power analysis for the behavioral sciences* (2nd ed.). Lawrence Erlbaum Associates.

Compeau, D. R., & Higgins, C. A. (1995). Computer self-efficacy: Development of a measure and initial test. *MIS Quarterly, 19*(2), 189-211. https://doi.org/10.2307/249688

Davis, F. D. (1989). Perceived usefulness, perceived ease of use, and user acceptance of information technology. *MIS Quarterly, 13*(3), 319-340. https://doi.org/10.2307/249008

Hair, J. F., Hult, G. T. M., Ringle, C. M., & Sarstedt, M. (2022). *A primer on partial least squares structural equation modeling (PLS-SEM)* (3rd ed.). Sage. https://doi.org/10.1007/978-3-030-80519-7

He, S., & Ren, Y. (2025). Exploring pre-service music teachers' acceptance of generative artificial intelligence: A PLS-SEM-ANN approach. *Frontiers in Psychology, 16*, Article 1571279. https://doi.org/10.3389/fpsyg.2025.1571279

Kinskofer, F., & Tulis, M. (2025). Motivational and appraisal factors shaping generative AI use and intention in Austrian higher education students and teachers. *Frontiers in Education, 10*, Article 1677827. https://doi.org/10.3389/feduc.2025.1677827

Kong, S. C., Yang, Y., & Hou, C. (2024). Examining teachers' behavioural intention of using generative artificial intelligence tools for teaching and learning based on the extended technology acceptance model. *Computers and Education: Artificial Intelligence, 7*, 100328. https://doi.org/10.1016/j.caeai.2024.100328

Lim, W. M., Gunasekara, A., Pallant, J. L., Pallant, J. I., & Pechenkina, E. (2023). Generative AI and the future of education: Ragnarök or reformation? A paradoxical perspective from management educators. *The International Journal of Management Education, 21*(2), Article 100790. https://doi.org/10.1016/j.ijme.2023.100790

Liu, Y., Wang, Q., & Lei, J. (2025). Adopting generative AI in future classrooms: A study of preservice teachers' intentions and influencing factors. *Behavioral Sciences, 15*(8), 1040. https://doi.org/10.3390/bs15081040

Pan, Y., & Li, G. (2025). The effects of perceived teacher support and growth language mindset on learner well-being in AI-integrated environment: The mediating role of generative AI attitude. *Frontiers in Psychology, 16*, Article 1660462. https://doi.org/10.3389/fpsyg.2025.1660462

Podsakoff, P. M., MacKenzie, S. B., Lee, J. Y., & Podsakoff, N. P. (2003). Common method biases in behavioral research: A critical review of the literature and recommended remedies. *Journal of Applied Psychology, 88*(5), 879-903. https://doi.org/10.1037/0021-9010.88.5.879

Tomczyk, Ł., & Majkut, A. (2025). Integrating AI in education: An analysis of factors influencing the acceptance, concerns, attitudes, competencies and use of generative artificial intelligence among Polish teachers. *Human Behavior and Emerging Technologies, 2025*, Article 5599169. https://doi.org/10.1155/hbe2/5599169

UNESCO. (2023). *Guidance for generative AI in education and research*. United Nations Educational, Scientific and Cultural Organization.

Venkatesh, V. (2000). Determinants of perceived ease of use: Integrating control, intrinsic motivation, and emotion into the technology acceptance model. *Information Systems Research, 11*(4), 342-365. https://doi.org/10.1287/isre.11.4.342.11872

Venkatesh, V., Morris, M. G., Davis, G. B., & Davis, F. D. (2003). User acceptance of information technology: Toward a unified view. *MIS Quarterly, 27*(3), 425-478. https://doi.org/10.2307/30036540

Venkatesh, V., Thong, J. Y. L., & Xu, X. (2012). Consumer acceptance and use of information technology: Extending the unified theory of acceptance and use of technology. *MIS Quarterly, 36*(1), 157-178. https://doi.org/10.2307/41410412

Verano-Tacoronte, D., Bolívar-Cruz, A., & Sosa-Cabrera, S. (2025). Are university teachers ready for generative

artificial intelligence? Unpacking faculty anxiety in the ChatGPT era. *Education and Information Technologies*. Advance online publication. https://doi.org/10.1007/s10639-025-13585-7

Wang, K., Ruan, Q., Zhang, X., Fu, C., & Duan, B. (2024). Pre-service teachers' GenAI anxiety, technology self-efficacy, and TPACK: Their structural relations with behavioral intention to design GenAI-assisted teaching. *Behavioral Sciences*, *14*(5), 373. https://doi.org/10.3390/bs14050373

Wang, Y. Y., & Wang, Y. S. (2022). Development and validation of an artificial intelligence anxiety scale: An initial application in predicting motivated learning behavior. *Interactive Learning Environments*, *30*(4), 619-634. https://doi.org/10.1080/10494820.2019.1674887